MINUTE ITEM
This Calendar Item No. 56
was approved as Minute Item
No. 56 by the State Lands
Commission by a vote of 3
to Ø at its 5/26/94
meeting

CALENDAR ITEM

56

A 53

S 28

05/26/94
PRC 1915
A. Scott

TERMINATION OF EXISTING LEASE AND ISSUANCE OF A REPLACEMENT INDUSTRIAL LEASE

APPLICANT:
Chevron U.S.A. Products Company
324 West El Segundo Boulevard
El Segundo, California 90245

AREA, TYPE LAND AND LOCATION:
4.65 acres of tide and submerged lands in Santa Monica Bay in the City of El Segundo, Los Angeles County.

LAND USE:
Construction of a 3200± foot extension to an existing 850 foot 60 inch diameter waste water outfall pipeline.

CURRENT LEASE TERMS:
Lease period:
49 years beginning April 15, 1957.

Surety bond:
None.

Public liability insurance:
None.

Consideration:
$127.50 as rental in full for the total period.

PROPOSED LEASE TERMS:
Lease period:
25 years beginning April 15, 1994.

Surety bond:
$50,000.00.

Public liability insurance:
Combined single limit coverage of $1,000,000.00.

Consideration:
$5,000.00 per annum; with the State reserving the right to fix a different rental on each fifth anniversary of the lease.

BASIS FOR CONSIDERATION:
Pursuant to 2 Cal. Code Regs. 2003.

APPLICANT STATUS:
Applicant is owner of upland.

PREREQUISITE CONDITIONS, FEES AND EXPENSES:
Filing fee, processing and environmental costs have been received.

STATUTORY AND OTHER REFERENCES:
A. P.R.C.: Div. 6, Parts 1 and 2; Div. 13.

B. Cal. Code Regs.: Title 3, Div. 3; Title 14, Div. 6.

AB 884:
07/20/94

OTHER PERTINENT INFORMATION:

1. Chevron currently maintains a 60 inch diameter waste water outfall that terminates approximately 350 feet offshore. This outfall meets all current water quality requirements for waste water disposal and the current National Pollutant Discharge Elimination System (NPDES) permit requirements, renewed in 1992. During the renewal process for the NPDES permit the public expressed concern regarding the near shore discharge and the possibility of health risks in the surf zone. During several studies of the water quality in the area of the outfall no evidence of health hazards caused by the outfall discharge could be identified. The public remained concerned about the location of the outfall discharge and Chevron committed to modification of the outfall to place the point of discharge further off shore.

2. Even though the current outfall is in full compliance with Chevron's NPDES permit, Chevron has designed an extension to the existing outfall that will address the public's perception that a water quality problem exists. The extended outfall together with a

redesigned diffused section will provide an even higher initial dilution ratio than currently provided by the existing outfall and the discharge will occur in deeper waters and further off shore.

3. This activity involves lands identified as possessing significant environmental values pursuant to P.R.C. 6370, et seq. Based upon the staff's consultation with the persons nominating such lands and through the CEQA review process, it is the staff's opinion that the project, as proposed, is consistent with its use classification.

4. Pursuant to the Commission's delegation of authority and the State CEQA Guidelines (14 Cal. Code Regs. 15025), the staff has prepared a Proposed Negative Declaration identified as ND 645, State Clearinghouse No. 94031030. Such Proposed Negative Declaration was prepared and circulated for public review pursuant to the provisions of CEQA.

   Based upon the Initial Study, the Proposed Negative Declaration, and the comments received in response thereto, there is no substantial evidence that the project will have a significant effect on the environment. (14 Cal. Code Regs. 15074(b))

   A Mitigation Monitoring Plan has been prepared in conformance with the provisions of the CEQA (Section 21081.6, P.R.C.).

FURTHER APPROVALS REQUIRED:

State Lands Commission; California Coastal Commission; U.S. Army Corps of Engineers.

EXHIBITS:

A. Land Description.
B. Location Map.
C. Negative Declaration ND 645 and Mitigation Monitoring Plan

IT IS RECOMMENDED THAT THE COMMISSION:

1. CERTIFY THAT A PROPOSED NEGATIVE DECLARATION, ND 645, STATE CLEARINGHOUSE NO. 94031030, ATTACHED HERETO AS EXHIBIT C, WAS PREPARED FOR THIS PROJECT PURSUANT TO THE PROVISIONS OF THE CEQA AND THAT THE COMMISSION HAS REVIEWED AND CONSIDERED THE INFORMATION CONTAINED THEREIN.

2. ADOPT THE NEGATIVE DECLARATION AND DETERMINE THAT THE PROJECT, AS APPROVED, WILL NOT HAVE A SIGNIFICANT EFFECT ON THE ENVIRONMENT.

3. ADOPT THE MITIGATION MONITORING PLAN, AS CONTAINED IN EXHIBIT "C", ATTACHED HERETO.

4. FIND THAT THIS ACTIVITY WILL INVOLVE LANDS IDENTIFIED AS POSSESSING SIGNIFICANT ENVIRONMENTAL VALUES PURSUANT TO P.R.C. 6370, ET SEQ., BUT THAT SUCH ACTIVITY WILL HAVE NO DIRECT OR INDIRECT EFFECT ON SUCH LANDS.

5. AUTHORIZE THE TERMINATION OF LEASE NO. 1915.1, PUBLIC RESOURCES CODE SERIES, EXECUTED ON MAY 27, 1957 WITH A BEGINNING DATE OF APRIL 15, 1957 TO BE TERMINATED AS OF APRIL 15, 1994 AND THE CONCURRENT ISSUANCE OF A REPLACEMENT LEASE FOR A TERM OF TWENTY-FIVE (25) YEARS BEGINNING APRIL 15, 1994; IN CONSIDERATION OF ANNUAL RENT IN THE AMOUNT OF $5,000, WITH THE STATE RESERVING THE RIGHT TO FIX A DIFFERENT RENTAL ON EACH FIFTH ANNIVERSARY OF THE LEASE; PROVISION OF A $50,000.00 SURETY BOND; PROVISION OF PUBLIC LIABILITY INSURANCE FOR COMBINED SINGLE LIMIT COVERAGE OF $1,000,000.00; FOR THE CONSTRUCTION AND CONTINUED MAINTENANCE OF AN OCEAN WASTE WATER OUTFALL PIPELINE ON THE LAND DESCRIBED ON EXHIBIT "A" ATTACHED AND BY REFERENCE MADE A PART HEREOF.

EXHIBIT "A"
LAND DESCRIPTION

P 1915

A strip of tide and submerged land of varying width in the Pacific Ocean, located in the Rancho Sausal Redondo, City of El Segundo, County of Los Angeles, State of California, and more particularly described as follows:

COMMENCING at the Northeast corner of Lot 1, Tract No. 1314, per the map recorded in Map Book 20, Page 161, of the Official Records of Los Angeles County; thence S23°13'E, 1,027.46 feet; thence S66°47'W, 153.82 feet to the high tide line as shown on said map of Tract No. 1314, said point being the POINT OF BEGINNING of the herein described parcel; thence from said point of beginning along the centerline of a 60 foot wide strip of land, 30 feet on either side of said centerline, S64°42'W, 850 feet to the end of said 60 foot wide strip of land; thence from said end of 60 foot strip of land, along the centerline of a 50 foot strip of land, 25 feet on either side of said centerline, S57° 39'W, 3,327 feet to the end of said centerline and this description.

END DESCRIPTION

Prepared by _____ May 17, 1994

Checked by _____ May 17, 1994

LICENSED LAND SURVEYOR
CRIS N. PEREZ
No. 5169
Exp. 6-30-95
STATE OF CALIFORNIA

CALENDAR PAGE	260
MINUTE PAGE	2257

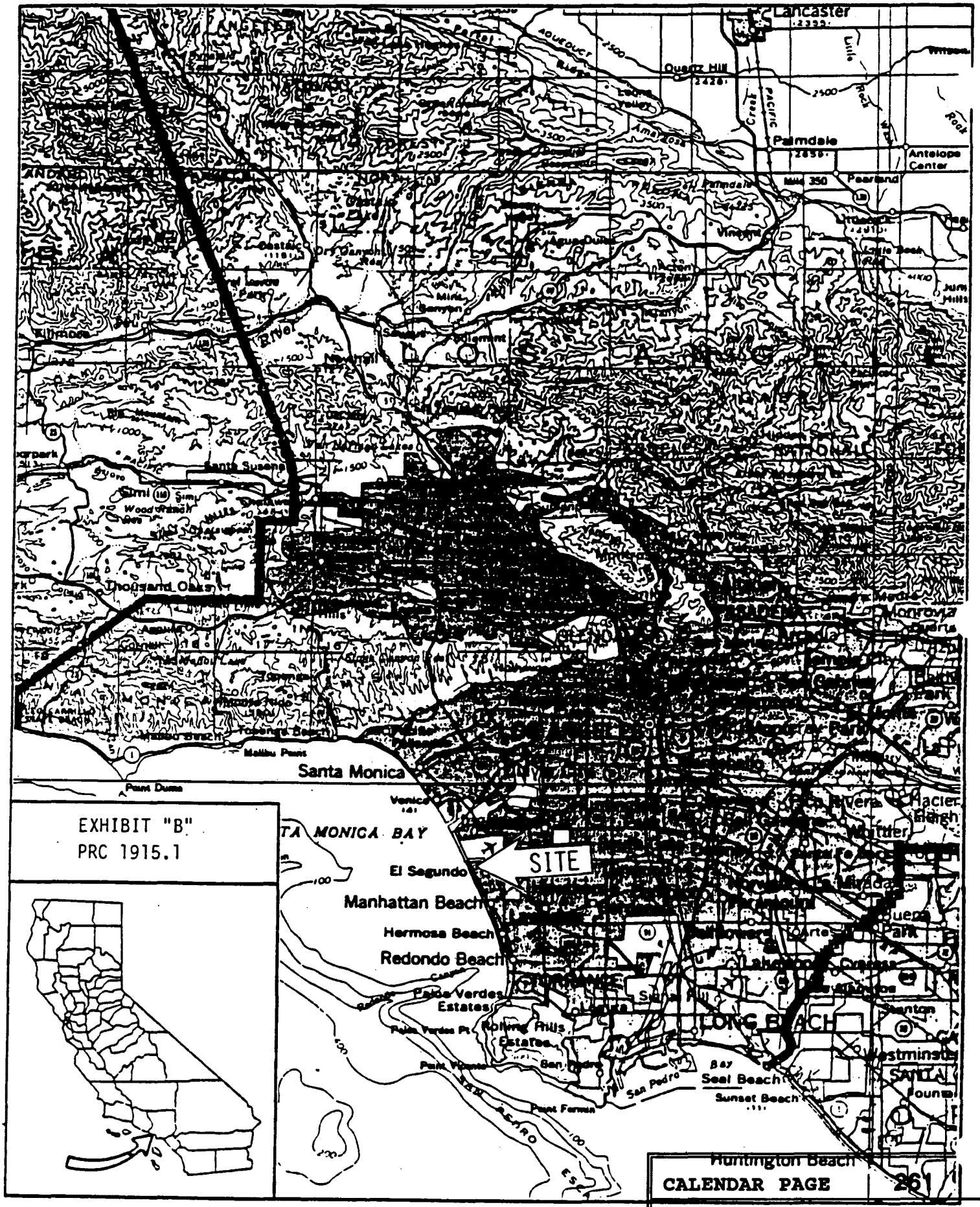

EXHIBIT "B"
PRC 1915.1

State of California

State Lands Commission

INITIAL STUDY AND PROPOSED NEGATIVE DECLARATION

for the CHEVRON EL SEGUNDO REFINERY

PROPOSED OCEAN OUTFALL EXTENSION

March 4, 1994

EXHIBIT C

PRC 1915

CALENDAR PAGE	261.1
MINUTE PAGE	2259

STATE OF CALIFORNIA

PETE WILSON, *Governor*

STATE LANDS COMMISSION

LEO T. McCARTHY, *Lieutenant Governor*
GRAY DAVIS, *Controller*
THOMAS W. HAYES, *Director of Finance*

EXECUTIVE OFFICE
1807 - 13th Street
Sacramento, CA 95814

CHARLES WARREN
Executive Officer

March 11, 1994
File: PRC 1915
ND 645

NOTICE OF PUBLIC REVIEW OF A PROPOSED NEGATIVE DECLARATION

(SECTION 15073 CCR)

A Negative Declaration has been prepared pursuant to the requirements of the California Environmental Quality Act (Section 21000 et seq., Public Resources Code), the State CEQA guidelines (Section 15000 et seq., Title 14, California Code Regulations), and the State Lands Commission Regulations (Section 2901 et seq., Title 2, California Code Regulations) for a project currently being processed by the staff of the State Lands Commission.

The document is attached for your review. Comments should be addressed to the State Lands Commission office shown above with attention to the undersigned. All comments must be received by April 13, 1994.

Should you have any questions or need additional information, please call the undersigned at (916) 322-0530.

Goodyear K. Walker

GOODYEAR K. WALKER
Division of Environmental
Planning and Management

Attachment

CALENDAR PAGE	261.2
MINUTE PAGE	2260

STATE OF CALIFORNIA

PETE WILSON, *Governor*

STATE LANDS COMMISSION

LEO T. McCARTHY, *Lieutenant Governor*
GRAY DAVIS, *Controller*
THOMAS W. HAYES, *Director of Finance*

EXECUTIVE OFFICE
1807 - 13th Street
Sacramento, CA 95814

CHARLES WARREN
Executive Officer

PROPOSED NEGATIVE DECLARATION

File: PRC 1915
ND 645
SCH No. 94031030

Project Title:	El Segundo Outfall Extension
Project Proponent:	Chevron U.S.A. Products Company
Project Location:	El Segundo, Los Angeles County
Project Description:	Extension of an existing 60-inch pipeline from 300 feet to 3,500 feet offshore of Chevron's El Segundo Refinery.
Contact Person:	Goodyear K. Walker Telephone: (916) 322-0530

This document is prepared pursuant to the requirements of the California Environmental Quality Act (Section 21000 et seq., Public Resources Code), the State CEQA Guidelines (Section 15000 et seq., Title 14, California Code Regulations), and the State Lands Commission regulations (Section 2901 et seq., Title 2, California Code Regulations).

Based upon the attached Initial Study, it has been found that:

/__/ that project will not have a significant effect on the environment.

/X/ mitigation measures included in the project will avoid potentially significant effects.

STATE LANDS COMMISSION

ENVIRONMENTAL IMPACT ASSESSMENT CHECKLIST – PART II

Form 13.20 (7/82)

File Ref.: _____

I. BACKGROUND INFORMATION

A. Applicant: Chevron U.S.A. Products Company
324 West El Segundo Blvd.
El Segundo, CA 90245

B. Checklist Date: 2 / 17 / 94

C. Contact Person: Kirk Walker
Telephone: (916) 322 - 0530

D. Purpose: Extension of existing treated waste water ocean outfall from 300 feet to approximately 3,500 feet offshore.

E. Location: Offshore from Chevron El Segundo refinery at 324 West El Segundo Blvd.

F. Description: The extension will consist of 3,200 ft. of 60-inch-nominal-diameter, high density polyethylene pipe with a new differser. No change in the treated waste water will occur.

G. Persons Contacted: See Section 8.0

II. ENVIRONMENTAL IMPACTS. *(Explain all "yes" and "maybe" answers)*

A. *Earth.* Will the proposal result in:

	Yes	Maybe	No
1. Unstable earth conditions or changes in geologic substructures?			X
2. Disruptions, displacements, compaction, or overcovering of the soil?			X
3. Change in topography or ground surface relief features?			X
4. The destruction, covering, or modification of any unique geologic or physical features?			X
5. Any increase in wind or water erosion of soils, either on or off the site?			
6. Changes in deposition or erosion of beach sands, or changes in siltation, deposition or erosion which may modify the channel of a river or stream or the bed of the ocean or any bay, inlet or lake?			X
7. Exposure of all people or property to geologic hazards such as earthquakes, landslides, mudslides, ground failure, or similar hazards?			X

CALENDAR PAGE 261.4
MINUTE PAGE 2262

	Yes	Maybe	No
B. *Air.* Will the proposal result in:			
1. Substantial air emmissions or deterioration of ambient air quality?			X
2. The creation of objectionable odors?			X
3. Alteration of air movement, moisture or temperature, or any change in climate, either locally or regionally?			X
C. *Water.* Will the proposal result in:			
1. Changes in the currents, or the course or direction of water movements, in either marine or fresh waters?			X
2. Changes in absorption rates, drainage patterns, or the rate and amount of surface water runoff?			X
3. Alterations to the course or flow of flood waters?			X
4. Change in the amount of surface water in any water body?			X
5. Discharge into surface waters, or in any alteration of surface water quality, including but not limited to temperature, dissolved oxygen or turbidity?			X
6. Alteration of the direction or rate of flow of ground waters?			X
7. Change in the quantity of ground waters, either through direct additions or withdrawals, or through interception of an aquifer by cuts or excavations?			X
8. Substantial reduction in the amount of water otherwise available for public water supplies?			X
9. Exposure of people or property to water-related hazards such as flooding or tidal waves?			X
10. Significant changes in the temperature, flow or chemical content of surface thermal springs?			X
D. *Plant Life.* Will the proposal result in:			
1. Change in the diversity of species, or number of any species of plants (including trees, shrubs, grass, crops, and aquatic plants)?			X
2. Reduction of the numbers of any unique, rare or endangered species of plants?			X
3. Introduction of new species of plants into an area, or in a barrier to the normal replenishment of existing species?			X
4. Reduction in acreage of any agricultural crop?			X
E. *Animal Life.* Will the proposal result in:			
1. Change in the diversity of species, or numbers of any species of animals (birds, land animals including reptiles, fish and shellfish, benthic organisms, or insects)?			X
2. Reduction of the numbers of any unique, rare or endangered species of animals?			X
3. Introduction of new species of animals into an area, or result in a barrier to the migration or movement of animals?			X
4. Deterioration to existing fish or wildlife habitat?			X
F. *Noise.* Will the proposal result in:			
1. Increase in existing noise levels?			X
2. Exposure of people to severe noise levels?			X
G. *Light and Glare.* Will the proposal result in:			
1. The production of new light or glare?			X
H. *Land Use.* Will the proposal result in:			
1. A substantial alteration of the present or planned land use of an area?			X
I. *Natural Resources.* Will the proposal result in:			
1. Increase in the rate of use of any natural resources?			X
2. Substantial depletion of any nonrenewable resources?			X

CALENDAR PAGE 261.5

MINUTE PAGE 2263

	Yes	Maybe	No
J. *Risk of Upset.* Does the proposal result in			
1. A risk of an explosion or the release of hazardous substances (including, but not limited to, oil, pesticides, chemicals, or radiation) in the event of an accident or upset conditions?			X
2. Possible interference with emergency response plan or an emergency evacuation plan?			X
K. *Population.* Will the proposal result in:			
1. The alteration, distribution, density, or growth rate of the human population of the area?			X
L. *Housing.* Will the proposal result in:			
1. Affecting existing housing, or create a demand for additional housing?			X
M. *Transportation/Circulation.* Will the proposal result in:			
1. Generation of substantial additional vehicular movement?			X
2. Affecting existing parking facilities, or create a demand for new parking?			X
3. Substantial impact upon existing transportation systems?			X
4. Alterations to present patterns of circulation or movement of people and/or goods?			X
5. Alterations to waterborne, rail, or air traffic?			X
6. Increase in traffic hazards to motor vehicles, bicyclists, or pedestrians?			X
N. *Public Services.* Will the proposal have an effect upon, or result in a need for new or altered governmental services in any of the following areas:			
1. Fire protection?			X
2. Police protection?			X
3. Schools?			X
4. Parks and other recreational facilities?			X
5. Maintenance of public facilities, including roads?			
6. Other governmental services?			X
O. *Energy.* Will the proposal result in:			
1. Use of substantial amounts of fuel or energy?			X
2. Substantial increase in demand upon existing sources of energy, or require the development of new sources?			X
P. *Utilities.* Will the proposal result in a need for new systems, or substantial alterations to the following utilities:			
1. Power or natural gas?			X
2. Communication systems?			X
3. Water?			X
4. Sewer or septic tanks?			X
5. Storm water drainage?			X
6. Solid waste and disposal?			X
Q. *Human Health.* Will the proposal result in:			
1. Creation of any health hazard or potential health hazard (excluding mental health)?			X
2. Exposure of people to potential health hazards?			X
R. *Aesthetics.* Will the proposal result in:			
1. The obstruction of any scenic vista or view open to the public, or will the proposal result in the creation of an aesthetically offensive site open to public view?			
S. *Recreation.* Will the proposal result in:			
1. An impact upon the quality or quantity of existing recreational opportunities?			X

CALENDAR PAGE 261.6
MINUTE PAGE 2264

T. *Cultural Resources.*

	Yes	Maybe	No
1. Will the proposal result in the alteration of or the destruction of a prehistoric or historic archeological site?			X
2. Will the proposal result in adverse physical or aesthetic effects to a prehistoric or historic building, structure, or object?			X
3. Does the proposal have the potential to cause a physical change which would affect unique ethnic cultural values?			X
4. Will the proposal restrict existing religious or sacred uses within the potential impact area?			X

U. *Mandatory Findings of Significance.*

1. Does the project have the potential to degrade the quality of the environment, reduce the habitat of a fish or wildlife species, cause a fish or wildlife population to drop below self-sustaining levels, threaten to eliminate a plant or animal community, reduce the number or restrict the range of a rare or endangered plant or animal or eliminate important examples of the major periods of California history or prehistory?			X
2. Does the project have the potential to achieve short-term, to the disadvantage of long-term, environmental goals?			X
3. Does the project have impacts which are individually limited, but cumulatively considerable?			X
4. Does the project have environmental effects which will cause substantial adverse effects on human beings, either directly or indirectly?			X

III. DISCUSSION OF ENVIRONMENTAL EVALUATION *(See Comments Attached)*

Refer to Section 5 of the initial study for a discussion of potential environmental impacts.

IV. PRELIMINARY DETERMINATION

On the basis of this initial evaluation:

[ ] I find the proposed project COULD NOT have a significant effect on the environment, and a NEGATIVE DECLARATION will be prepared.

[ ] I find that although the proposed project could have a significant effect on the environment, there will not be a significant effect in this case because the mitigation measures described on an attached sheet have been added to the project. A NEGATIVE DECLARATION will be prepared.

[ ] I find the proposed project MAY have a significant effect on the environment, and an ENVIRONMENTAL IMPACT REPORT is requied.

CALENDAR PAGE	261.7
MINUTE PAGE	2265

Date: / /

For the State Lands Commission

Form 13.20 (7/82)

State of California

State Lands Commission

INITIAL STUDY AND PROPOSED NEGATIVE DECLARATION

for the CHEVRON EL SEGUNDO REFINERY

PROPOSED OCEAN OUTFALL EXTENSION

March 4, 1994

TABLE OF CONTENTS

LIST OF TABLES

LIST OF FIGURES

1.0 INTRODUCTION

Chevron U.S.A. Products Company (Chevron) submitted an application to the California State Lands Commission (SLC) to amend Lease #PRC-1915.1. The proposed amendment provides for extending the El Segundo refinery's treated-wastewater ocean outfall pipe from approximately 300 to 3,500 feet offshore. This Negative Declaration has been prepared to evaluate the potential environmental effects of the proposed ocean outfall extension in accordance with California Environmental Quality Act (CEQA) requirements.

The Negative Declaration was prepared to provide sufficient information about the proposed project, environmental setting, potential impacts, and proposed mitigation measures incorporated into the project to demonstrate that the proposed project will avoid any significant effects on the environment. The pipe installation project will be of limited duration and proposed mitigation measures will minimize any potential impacts. Operation of the outfall at its new location is expected to improve local water quality by discharging its treated wastewater, which will not change in either volume or constituents, farther offshore providing for greater initial dilution and reducing the likelihood that the discharge will enter the surf zone.

The scope of this document is limited to discussions of the onshore pipe construction, towing of the pipe to the marine construction location, pipe installation, and operation of the new outfall. The rest of this document is organized as follows:

Section	Description
2	Background
3	Project Description
4	Environmental Setting
5	Environmental Impacts
6	Mitigation Measures
7	Mitigation Monitoring
8	Agencies Contacted
9	References
10	Comments Received in Response to Proposed Negative Declaration
11	Response to Comments

2.0 BACKGROUND

2.1 DESCRIPTION OF OPERATIONS

The Chevron El Segundo refinery's ocean outfall is in Santa Monica Bay off the coast of El Segundo in Los Angeles County (Figure 2-1). The Chevron El Segundo refinery is onshore east of the ocean outfall. The outfall is between the City of Los Angeles Department of Water and Power Scattergood generating plant and Southern California Edison (SCE) El Segundo generating plant outfalls, about 800 feet north of a manmade rock groin (Figure 2-2). The outfall discharges treated refinery wastewater under a National Pollutant Discharge Elimination System (NPDES) permit administered by the Los Angeles Regional Water Quality Control Board (RWQCB) under authority of the U.S. Environmental Protection Agency (EPA). The NPDES permit was revised and renewed in April 1992 by the RWQCB in accordance with the California Ocean Plan.

The outfall was constructed in 1957 as a saltwater return and wastewater line. The 60-inch-inside-diameter concrete ocean outfall pipe extends approximately 300 feet offshore into Santa Monica Bay. The outfall's diffuser consists of a 100-foot-long concrete pipe with ports for effluent distribution at a depth of approximately 20 feet. The outfall pipe is buried in the surf zone; beyond the surf zone, the outfall pipe rests on the ocean floor.

The outfall receives water from two of the refinery's three wastewater systems: from a process wastewater system and from a noncontact wastewater and stormwater system. The third wastewater system, sanitary sewers, is connected to the City of El Segundo's sanitary drainage system for treatment at the City of Los Angeles Hyperion Wastewater Treatment

Plant; sanitary sewage is not discharged through the ocean outfall. The refinery's treatment process consists of full primary treatment of all refinery water including rainwater and full secondary treatment of all process-contacted water. If either treated wastewater stream does not meet the NPDES discharge limits, it can be pumped into the refinery's effluent diversion tanks for storage until treated further. These tanks have a combined capacity of 14.3 million gallons and will normally be used to ensure that the treatment plants do not become overtaxed by high-flow conditions such as those produced by heavy winter storms. The refinery discharges approximately 8 million gallons of treated wastewater per day.

Chevron and state regulators regularly monitor the operation of the outfall. All water discharged is required to meet the limits specified in Chevron's NPDES permit (#CA0000337). These site-specific limits are determined by the RWQCB on the basis of Chevron's effluent, delivery system and the receiving waters and are designed to protect human health and the marine environment. In accordance with the permit conditions, Chevron routinely samples the wastewater discharge, conducts receiving water monitoring, has conducted benthic and mussel surveys (using an independent contractor), and is audited regularly by state inspectors. The results of the permit monitoring program are documented and reports are sent to the RWQCB on a monthly and annual basis.

The Chevron El Segundo Refinery has been in complete compliance with its NPDES permit since January 1990. Between 1986 and 1990 permit limits were exceeded four times for total suspended solids, pH, and biological oxygen demand; the episodes were reported to the RWQCB.

2.2 PROJECT OBJECTIVES

2.2.1 Public Concern about the Outfall

During the NPDES permit renewal process, which included public notification and involvement, the public voiced concern about the location of the outfall. Although permit limits are designed to keep chemical constituents entering the receiving waters at levels

considered safe for humans and the local marine habitat, the public remains concerned about the possibility of health impacts.

Studies conducted for Chevron show that the treated wastewater does enter the surf zone, but there is no evidence that the constituent levels measured in the surf zone or elsewhere in the vicinity of the outfall pose a health threat. An ocean current and dilution study conducted in 1988 and 1989 using field tests and computer modeling showed that the effluent plume from Chevron's outfall is influenced by a thermal barrier created by the cooling water discharges from the Scattergood and SCE outfalls farther offshore. The plume follows the shoreline and can enter the surf zone (Radian 1989a). The study consisted of field tests, computer modeling and physical modeling. Current measurements and a dye dilution study yielded empirical data that describe the effluent's movement and dilution in the receiving waters; field data were also used to validate the computer model runs (Radian 1989a).

A health risk assessment was also conducted to evaluate potential exposure to effluent constituents and impacts resulting from the exposure. Using conservative exposure scenarios based on ambient concentrations of chemicals several orders of magnitude above levels measured in the field, the study demonstrated that even frequent users of the beach would not be adversely affected by the wastewater discharged by Chevron (Radian 1989b). An October 1992 follow-up to this study confirmed the validity of the first study's results (Radian 1992).

Although field data and risk evaluations demonstrate that the effluent should not be a public health concern and the RWQCB sets and enforces discharge limits that include safety factors, the public's concern about the outfall remains. Chevron has therefore committed to modifying the outfall.

2.2.2 Project Objectives

The objective of the proposed project is to address the public's concern about the treated wastewater entering the surf zone. Chevron proposes to move the discharge point of the treated wastewater farther offshore than the existing outfall to reduce the likelihood that the discharge will enter the surf zone. Results of a plume dispersion analysis employing

computer simulation and physical modeling techniques show that extending the discharge point to 3,500 feet offshore will prevent the effluent from entering the surf zone (Radian et al 1989).

2.2.3 Public Benefit Resulting from the Proposed Project

As discussed above, there is no demonstrated need for the proposed project; the sole reason for undertaking the project is to address the public's perception that a problem exists. However, Chevron has designed the project to improve upon the wastewater system that is already in full compliance with its NPDES limits. In addition to addressing the public's concern, the proposed project will improve localized water quality because the effluent, which will not change in either volume or composition as a result of this project, will be discharged farther offshore and will have a higher initial dilution ratio owing to the increased depth and modified diffuser design.

2.3 REVIEW AND SELECTION OF PROJECT ALTERNATIVES

Chevron considered several options for addressing the public's concern about the nearshore discharge of the treated wastewater.

2.3.1 Alternative 1: Extend the Existing Outfall to Discharge Approximately 3,500 feet Offshore.

In 1989, a model was made of the nearshore conditions around Chevron's outfall including the intake and discharge lines from both the El Segundo SCE power plant and the City of Los Angeles's Scattergood power plant. The study was conducted to help determine the optimum placement of the Chevron's outfall to reduce the effects of the other outfalls on discharge dispersion. Moving Chevron's discharge out approximately 2,000 feet put it beyond the thermal barrier caused by the other outfalls, but during some flow conditions it could pass directly over the SCE intake lines allowing it to be drawn into them. Moving the discharge out approximately 3,200 feet moved it beyond both the thermal barrier and the SCE intake lines.

Pipe extension to approximately 3,500 feet offshore would allow for reduced impacts of the discharge on the surf zone or other near shore facilities without modifying other system features or requiring pumps.

2.3.2 Alternative 2: Send Wastewater to Hyperion for Treatment and Discharge.

This option would eliminate treated wastewater discharge from the existing outfall. However, this option would require the installation of a pumping station and pipeline to transfer the water to Hyperion. Because of the capital and operating costs of the new facility and tie-in fees proposed by Hyperion, Chevron does not consider this option to be economically viable.

2.3.3 Alternative 3: Send Wastewater to the Tertiary Treatment Plant Being Built by the West Basin Municipal Water District (WBMWD).

Chevron's treated wastewater still has a high level of dissolved solids and does not meet the new plant's requirements; therefore, this option is not technically feasible.

2.3.4 Alternative 4: Zero Discharge.

This option is not technically or economically feasible.

2.3.5 Alternative 5: Reroute the Discharge Farther Offshore through the Abandoned Berth 1 Lines.

This option would require installation of pumps onshore and rerouting of the existing pipe. The pumps would increase energy consumption and operating costs associated with the outfall. In addition, the existing outfall would still be needed as a backup for high-flow conditions, so nearshore discharge would not be fully eliminated.

2.3.6 Reasons for Selecting the Proposed Alternative

After reviewing the merits of each alternative, Chevron selected the outfall extension alternative because it meets the project objective of addressing the public's concern and is economically and technically superior to the other alternatives, as follows:

- The extended outfall will discharge the treated wastewater farther offshore and beyond the thermal barrier created by the neighboring outfalls. This will reduce the possibility of the discharge entering the surf zone and improve nearshore water quality.

- The delivery system, which is gravity fed, will remain unchanged. This is a positive aspect of the proposed project because it restricts the scope of the construction to the pipe itself and will not involve construction on the beach.

- No pumps will need to be installed to transport the effluent. The proposed option will not require a backup system and maintains a single discharge point. It will not generate the high operation and maintenance costs associated with operating pumps.

- Placement of the plastic pipe on the ocean floor is cost-effective and results in fewer environmental impacts than a buried pipeline.

Details of the proposed project and construction activities are discussed in Section 3.0.

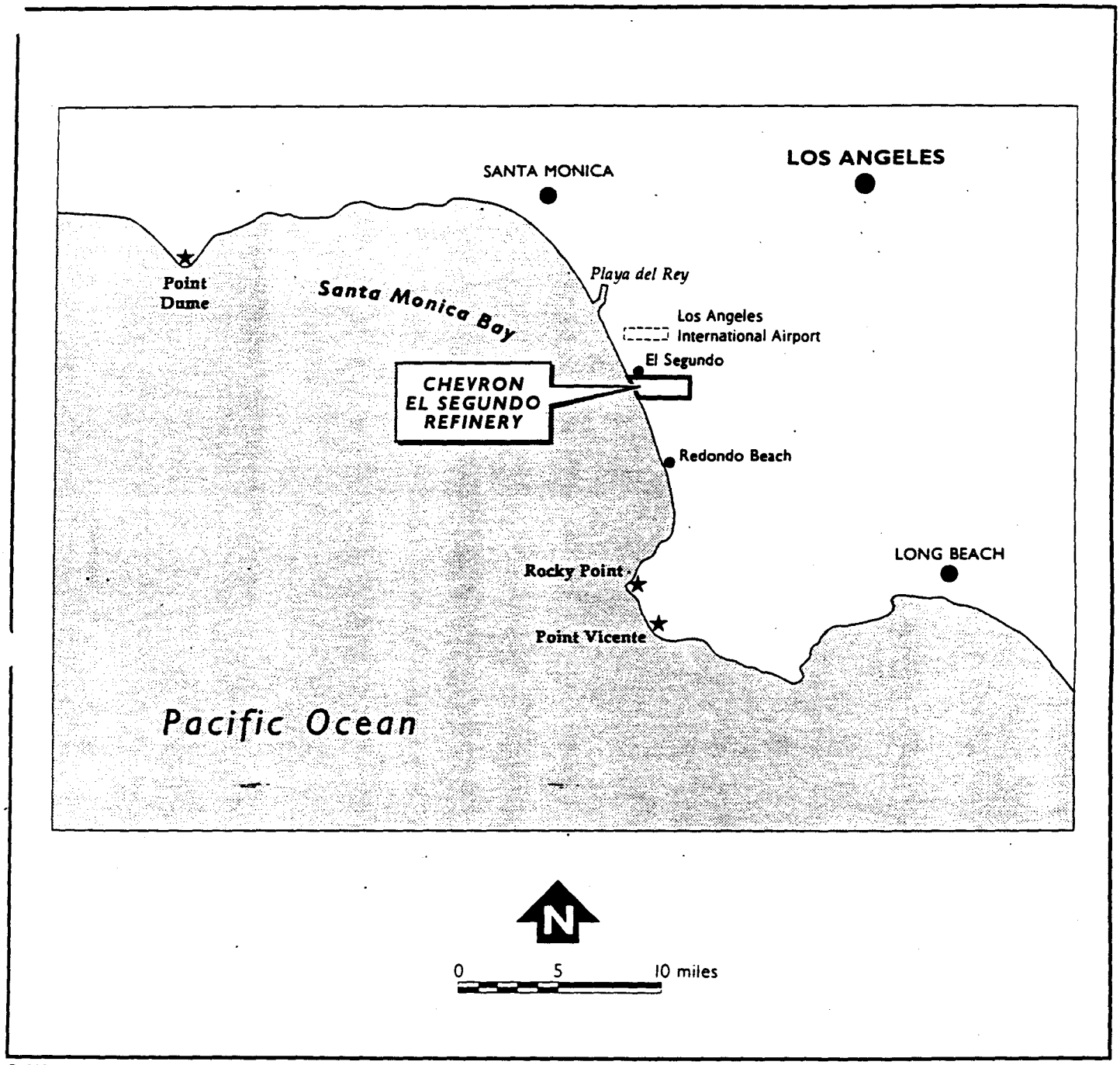

CV9050.a 10/11/93

Figure 2-1

Vicinity Map

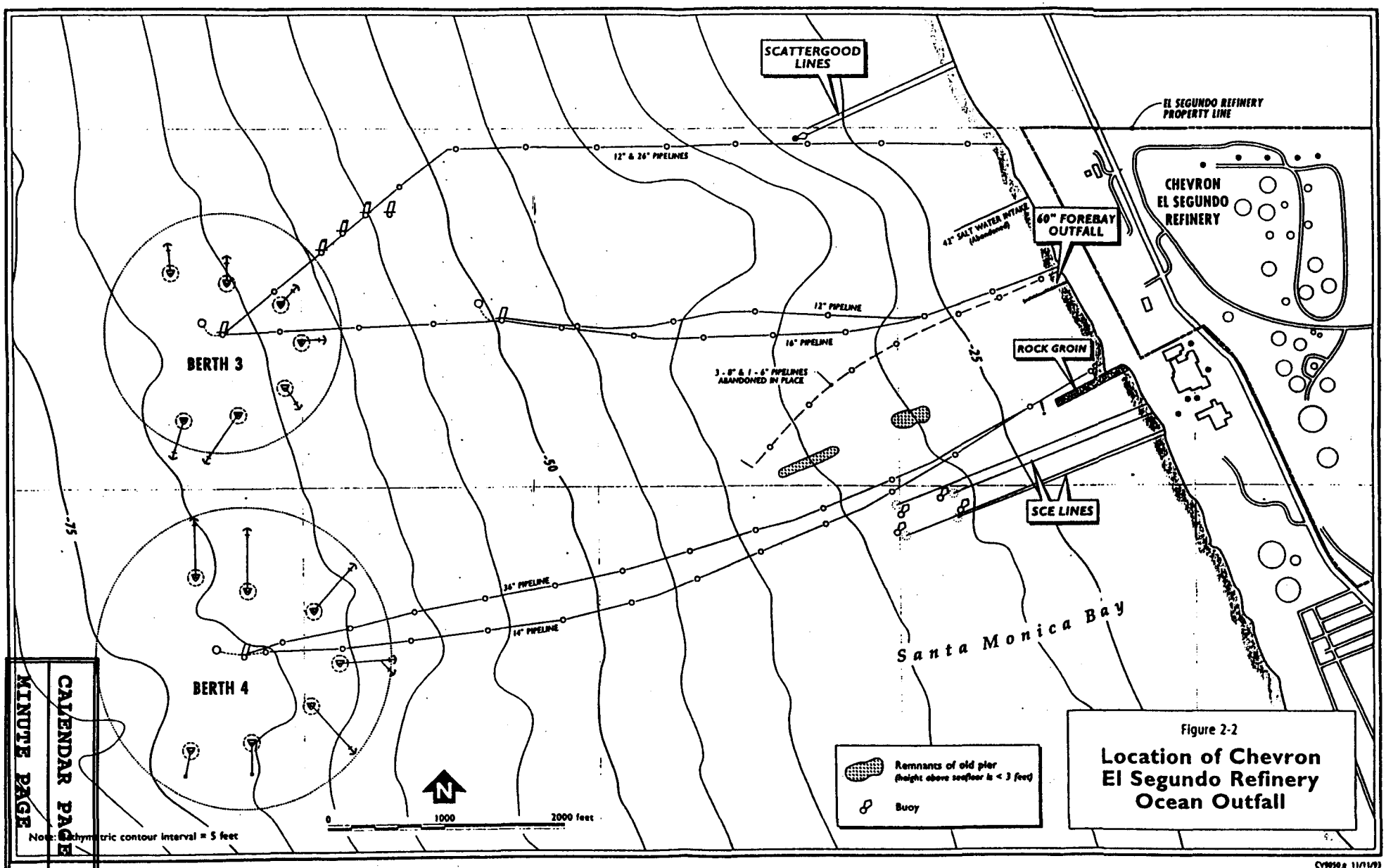

Figure 2-2

Location of Chevron El Segundo Refinery Ocean Outfall

CY9050.a 11/11/93

3.0 PROJECT DESCRIPTION

3.1 PROJECT OVERVIEW

The existing outfall line, which extends 300 feet offshore, will be extended to approximately 3,500 feet offshore using 60-inch-nominal-diameter piping. The proposed extension will run south of and parallel to the abandoned Berth 1 lines. The refinery's wastewater discharge quality and rate of about 5,500 gallons per minute (gpm) will not change as a result of this project. Figure 3-1 presents the proposed outfall line extension.

The proposed extension will be constructed and installed in a way similar to the recent Marine Terminal Upgrade project. This method successfully minimizes offshore barge activity by constructing the approximate 3,200-foot extension onshore in the Long Beach/San Pedro area, and then towing it around Palos Verdes into position off El Segundo. Construction activities will consist of pipe procurement and fabrication; onshore assembly; towing of the pipe to the marine construction location; and installation of the pipe. The construction phase is described in Section 3.2. Operations are presented in Section 3.3.

3.2 PIPE CONSTRUCTION

3.2.1 Design

The 3,200-foot outfall line extension will consist of 60-inch-nominal-diameter, high-density polyethylene (HDPE) piping that has a wall thickness of 2.4 inches. HDPE was selected over concrete and steel because it causes less disruption to the ocean floor during installation, it is

resistant to corrosion and requires no coatings or cathodic protection, and it is easy to work with. The 3,200-foot extension will be fitted to the existing diffuser with a 20-foot tie-in spool also made of HDPE. A new diffuser will be attached to the end of the proposed extension. Figure 3-2 is a schematic of the proposed outfall extension.

The new diffuser design will differ from the existing diffuser in the number and size of the ports as well as the overall length. The new diffuser will have small ports for normal flow (up to about 10,000 gpm) and larger ports which will open only during higher flow rates, thereby achieving good dilution ratios during both normal and high flow rates. The two diffusers can be compared as follows:

	Existing Diffuser	New Diffuser
Length	100 ft.	300 ft.
Depth	~18 ft.	~40 ft.
Number and size of ports	50 (9 in. by 10 in.)	100 (2 in.) - small 24 (8 in.) - large
Effective dilution ratio	~38:1	~90:1

3.2.2 Onshore Construction

The pipe string will be assembled onshore at a site in the Queensway Bay District of the Port of Long Beach (Figure 3-3). At the construction site, the pipe segments will be assembled, inspected, and launched for towing to the offshore construction site.

The pipe sections will be received, inspected, and stored at the construction site. Temporary ramps and planks, equipment, and materials will be set up for pipe storage, assembly, and launch; these will be removed upon completion of the onshore construction.

The pipe sections will be joined using heat fusion butt welding. This type of welding uses a fusion unit that squares the ends, heats the ends separately, the heating element is removed, and the unit applies pressure as the material flows together. The fusion unit consists of one fixed jaw and one hydraulically operated movable jaw, mounted on a rugged frame to ensure

precise alignment. The jaws are opened, closed, and clamped, and the ends of the each pipe are brought together by two hydraulic cylinders. The unit is equipped with a hydraulically powered facer that squares the ends and exposes fresh material on the two pipes to be fused. A thermostatically-controlled heater is moved to and from its operating position to fuse the pipes in accordance with pipe manufacturer's requirements (McElroy; McElroy 1992). The pipe fusion will be performed by an experienced fusion technician who will visually inspect the joined pipes for flaws. The 50-foot pipe sections will be welded together to form six strings 500 feet long.

When the pipe string is ready to be launched, an open tow and trail head will be used to assist in positioning the pipe. Beacons will be installed on the pipe ends to assist in positioning the strings offshore. Pendants (the wire lines used between the tug and pullhead) will be connected to each end of the pipe string.

The construction site will need to be set up for pipe string launching. Roller supports will be constructed on the site. At the beginning of the rock berm, a transition ramp will be installed temporarily for the launch. Chevron has specified that the transition ramp should rely as little as possible on the rock berm and that any supports placed on the rock berm should not disturb armor rocks (Oceaneering 1993).

Chevron will ensure that contractors restore the site to its pre-construction condition following launch of the pipes. All debris, materials, and equipment will be removed from the site. Any spill of hazardous materials will be cleaned up. Any gates or fences removed during construction will be replaced and any damage to the rock berm will be repaired.

3.2.3 Offshore Construction

The major offshore construction activities are described below.

- **Pipe String Launch.** Following preparation and inspection of the pipe sections and launch equipment, the pipes will be launched. A holdback line will be connected to the onshore end of the first string. A 200-foot pendant line from the lead tug will be connected to the pulling head of the first string.

The six 500-foot strings will be fused together as the lead and subsequent strings are launched.

At regular intervals, the launch will be halted in order to attach weights and buoys.

When the last string has been placed on the launch ramp and joined with the preceding string, a 200-foot trailing pendant will be attached to the trail head. The other end of the pendant will be connected to the holdback line. Once the last string has been towed completely off the launch ramp and into the water, the lead tug will stop and allow the trailing tug to connect its tow line.

A weather window of five days of no inclement weather is required by Chevron prior to launching.

- **Pipe String Tow.** The 3,200-foot extension will be towed from the launch area to the offshore installation site by two tugs. The tugs will use a near-surface tow to transport the pipe string. The pipe string will be maintained 8 feet below the surface with a system of weights and buoys (see Figure 3-4). The tow will proceed at 2 to 4 knots (relative to the water) with continuous monitoring of buoys and pipe configuration. This method was used by Chevron for the pipe repair work at Berth 3 in 1991 and the Berth 3 reconfiguration in June 1993. Chevron will issue a Notice to Mariners through the U.S. Coast Guard, notifying marine vessels of the towing times and locations. In addition, speed boats or similar marine vehicles will accompany the tow to ensure that pleasure craft do not interfere with the towing. The tow route is shown in Figure 3-5.

- **Positioning and Lowering Pipe String.** Positioning of the pipe string will be aided by visual observation of the buoys. The pipe string will be submerged into place by disconnecting the buoys systematically from the onshore to the offshore end of the string. When the pipe is completely on the seabed, the end positions will be checked by divers.

- **Cleaning Existing Diffuser.** The effluent flow will be shut off in order to remove the existing diffuser end plate and to attach a transition spool. Once the transition spool is attached, flow will resume at a reduced rate to allow the divers to work efficiently. Approximately 27 cubic yards of sand and rock (22.5" deep by 110' long, inside a 60"-ID line) will be removed from inside the existing diffuser. Most of the holes in the existing diffuser will be plugged as the cleaning proceeds. Holes that are currently exposed will remain open until the new diffuser is in service. The holes will be plugged using T-bar brackets with single studs. A metal plate with a neoprene gasket will be attached to the stud and tightened to the inside wall of the diffuser. It will take an estimated 10 days at 14 hours per day to complete this task.

- **Subsea Connection.** To connect the extension line to the transition spool a tie-in spool will be used. Less than 10 cubic yards of sand will be displaced

to allow for placement of this tie-in spool (Figure 3-6). A tie-in spool will also be used to connect the extension to the new diffuser. No sand displacement will be needed for the offshore tie-in spool connection. These spools will be measured and then fabricated onshore.

Once connected, the outfall line will be anchored with a combination of weights and auger anchors. It is anticipated that these anchors will be placed every 60 feet (Figure 3-7).

- **Site Cleanup.** All construction debris will be cleared from the seabed. Temporary marker buoys also will be retrieved.

- **Inspection.** Chevron plans to have divers visually inspect the outfall line and diffuser upon project completion, one year later, and then about every five years. After initial inspections, the frequency of subsequent inspections will be determined by the inspection results and operating data. The divers will look for concrete damage, rebar rust-through, chain corrosion, auger head/chain attachment corrosion, damage or indicators of stress to the HDPE pipe, and sand movement or scouring around the pipe. These inspections will be documented with a written report or video tape.

3.3 OPERATIONS

A description of the refinery's wastewater treatment operations was presented in Section 2.1. No changes in operations will result from this project. The outfall extension will have no effect on current refinery or marine terminal operations.

When the line is taken out of service, Chevron will consider a range of options and select an alternative that is best suited to environmental, regulatory, technical, and economic conditions at that time. Options will probably include line removal and abandonment-in-place.

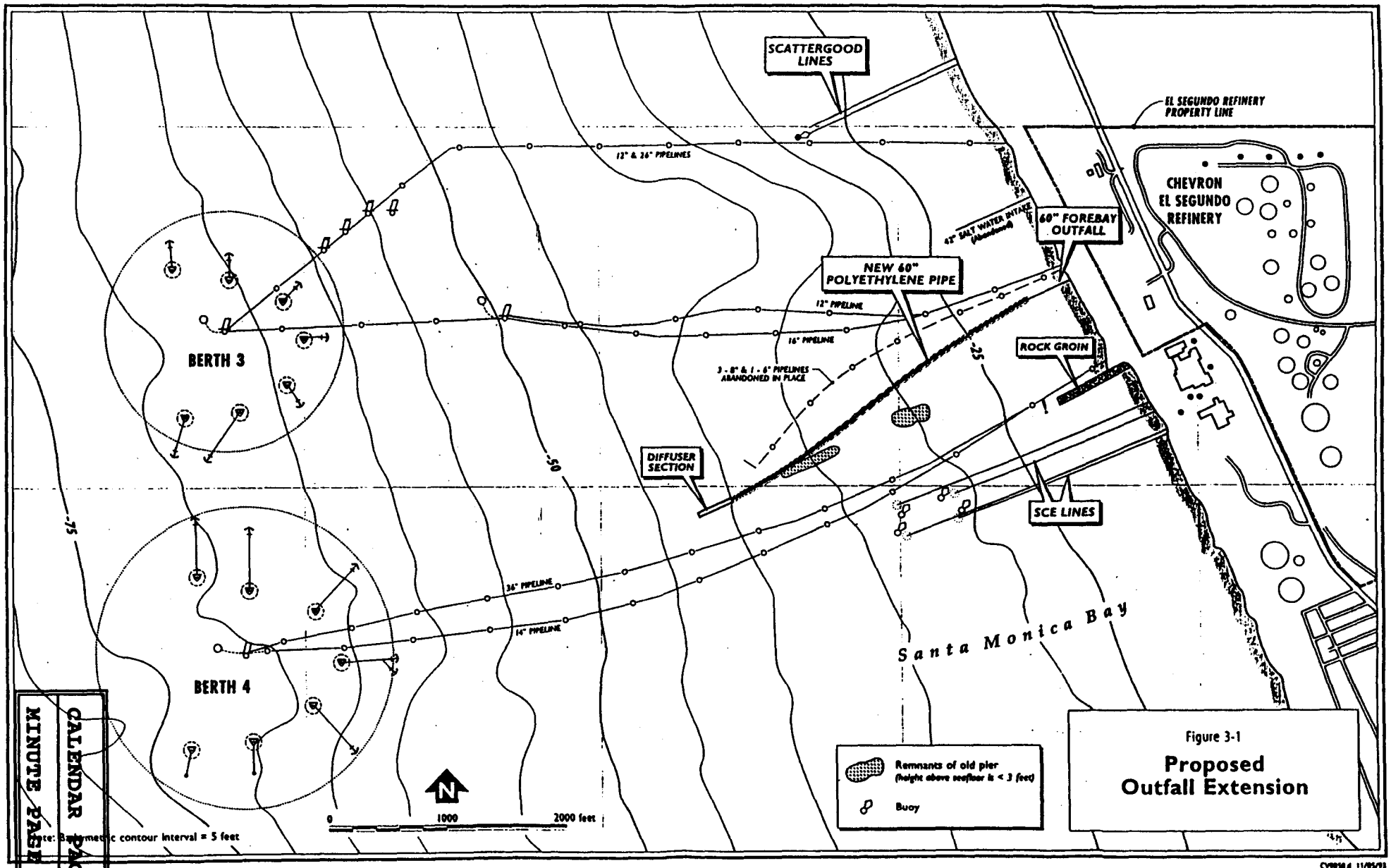

Figure 3-1
Proposed Outfall Extension

CV9050.4 11/05/93

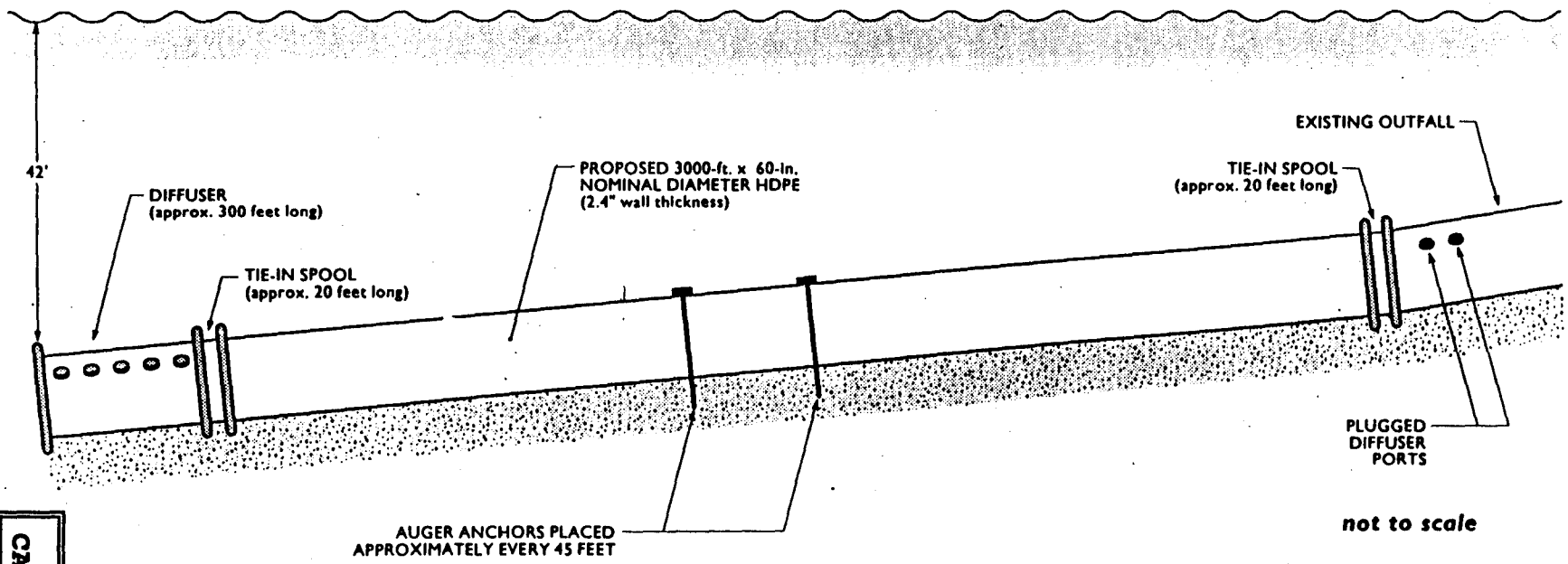

CV9050.f 11/02/93

Figure 3-2

SCHEMATIC OF EXISTING AND PROPOSED OUTFALL EXTENSION

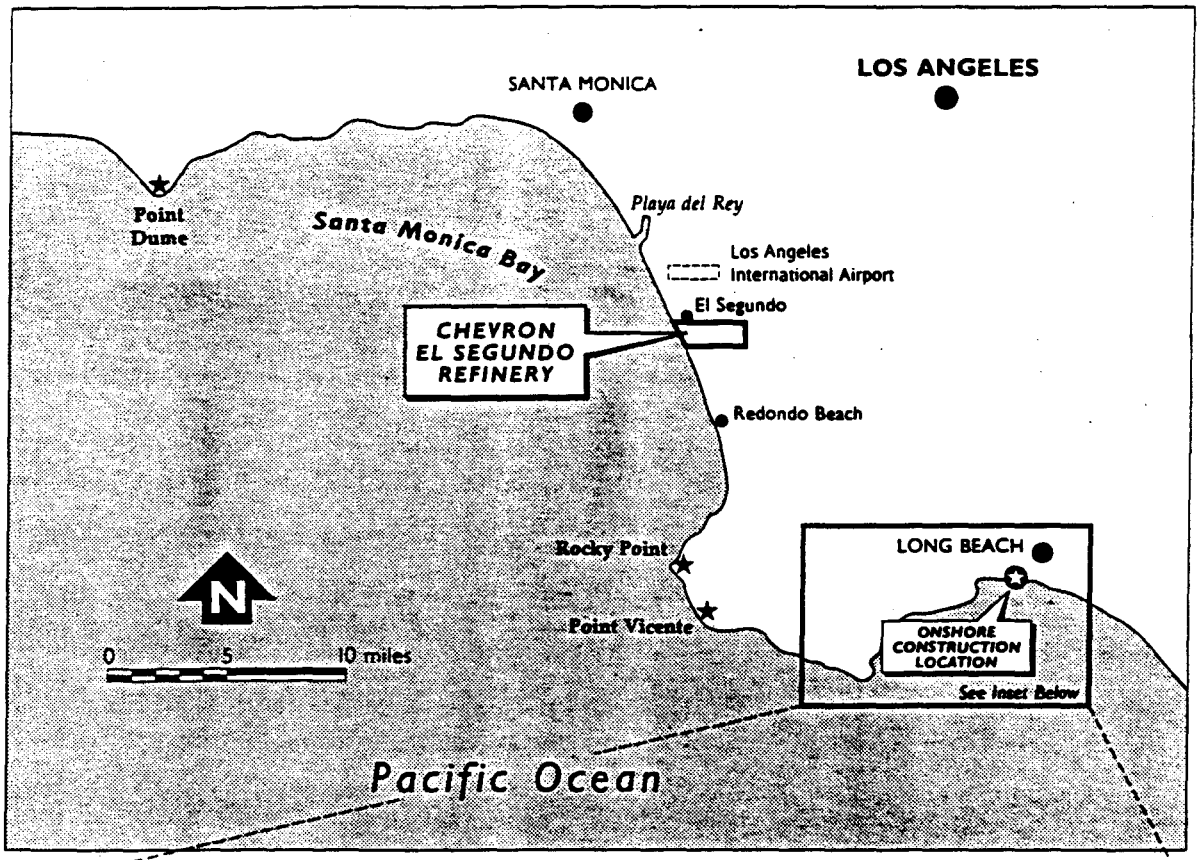

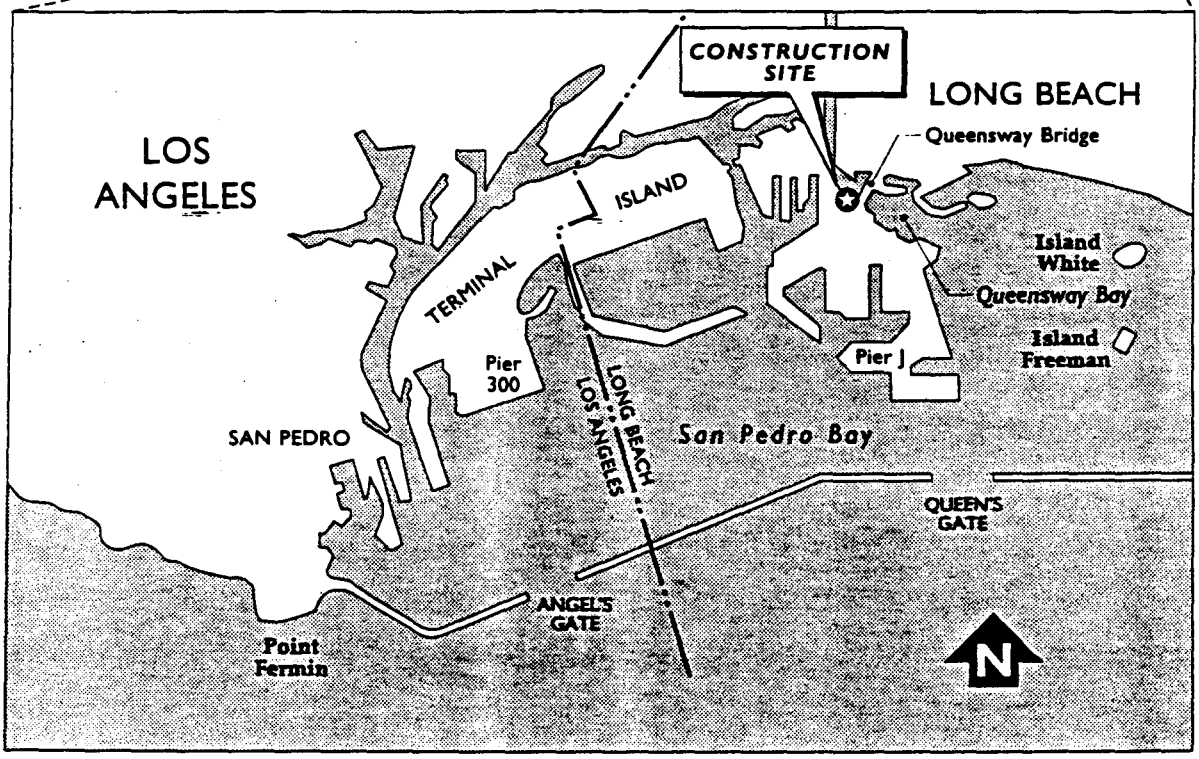

CV9050.b 10/11/93

Figure 3-3

Location of Onshore Pipeline Construction Site

CV706035.CDR

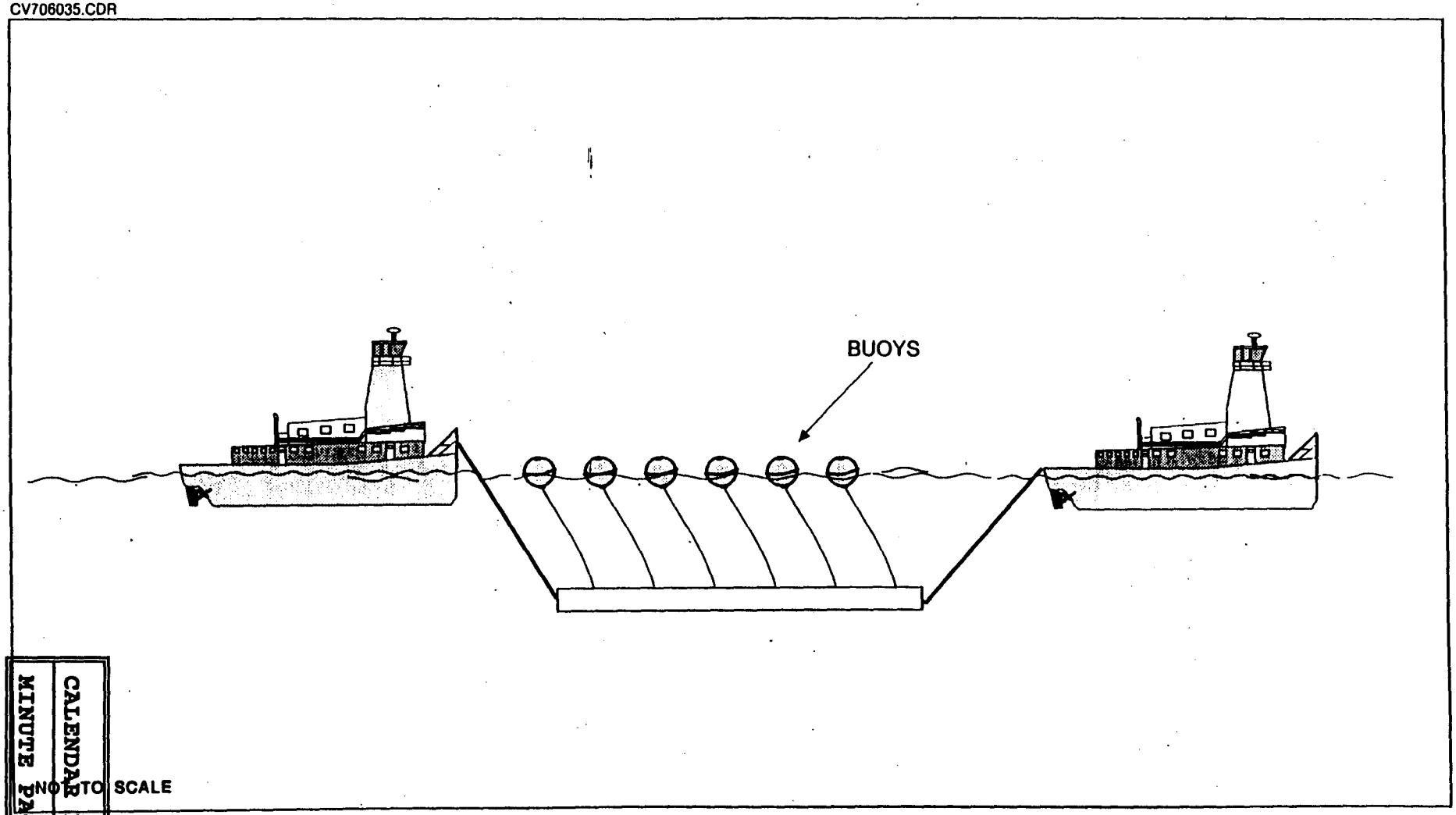

NOT TO SCALE

SOURCE: Chevron USA

Figure 3-4
NEAR-SURFACE TOW OF PIPE STRING

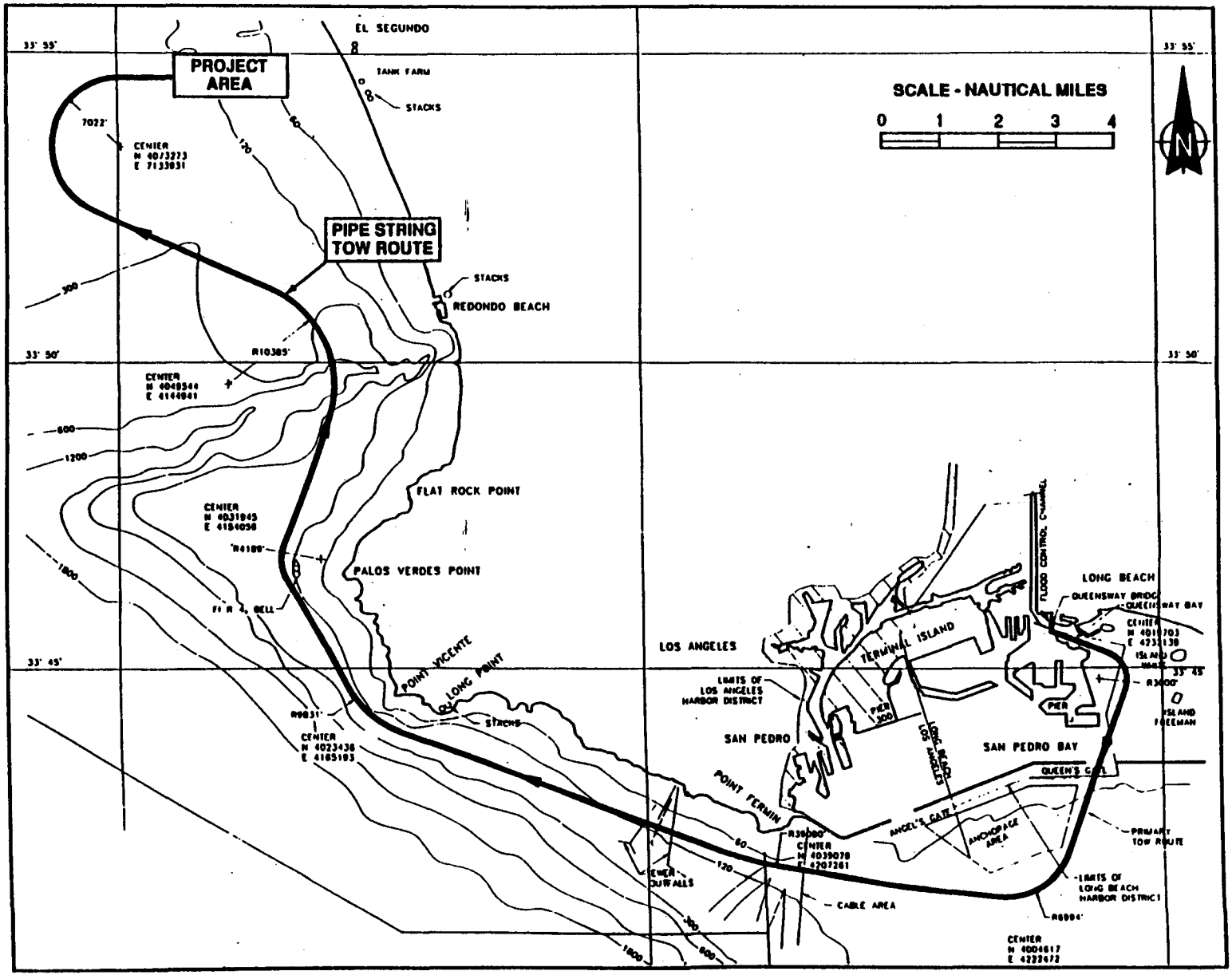

SOURCE: Intec Engineering, Inc.

Figure 3-5
TOW ROUTE

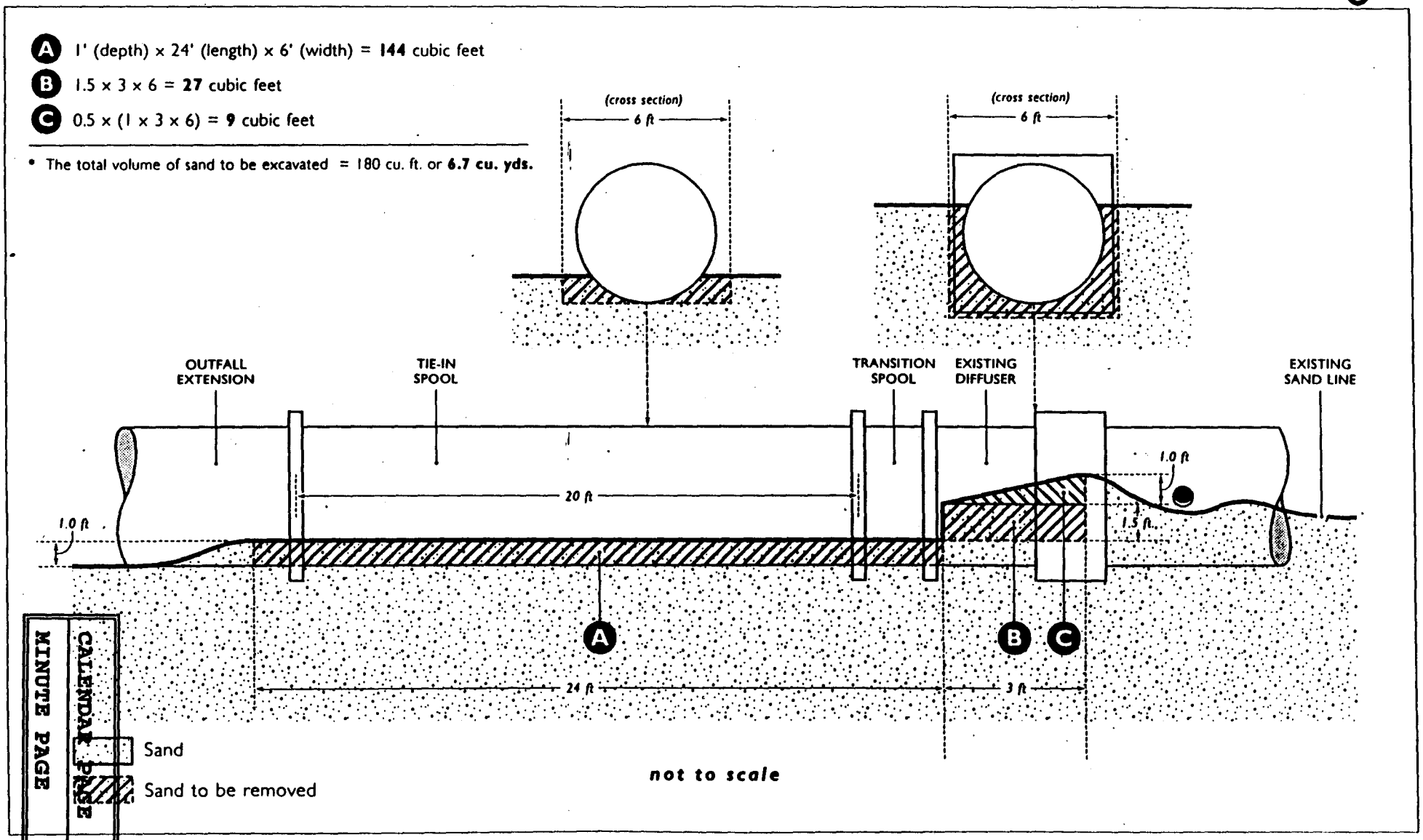

CV9050.g 11/08/93

Figure 3-6

SAND REMOVAL ESTIMATION

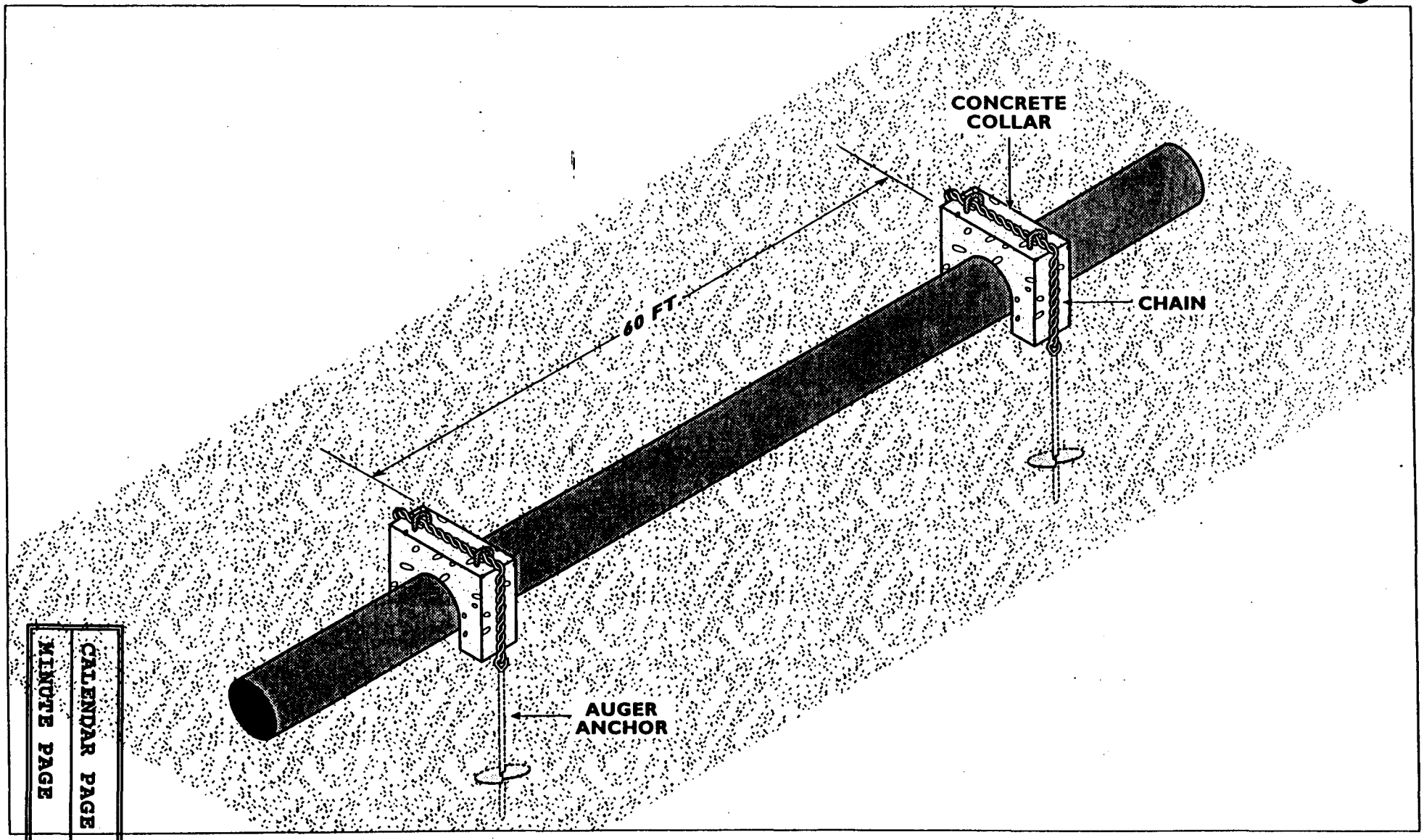

CV9080.b(c42) 03/03/94

Figure 3-7

Anchor System

Chevron El Segundo Ocean Outfall

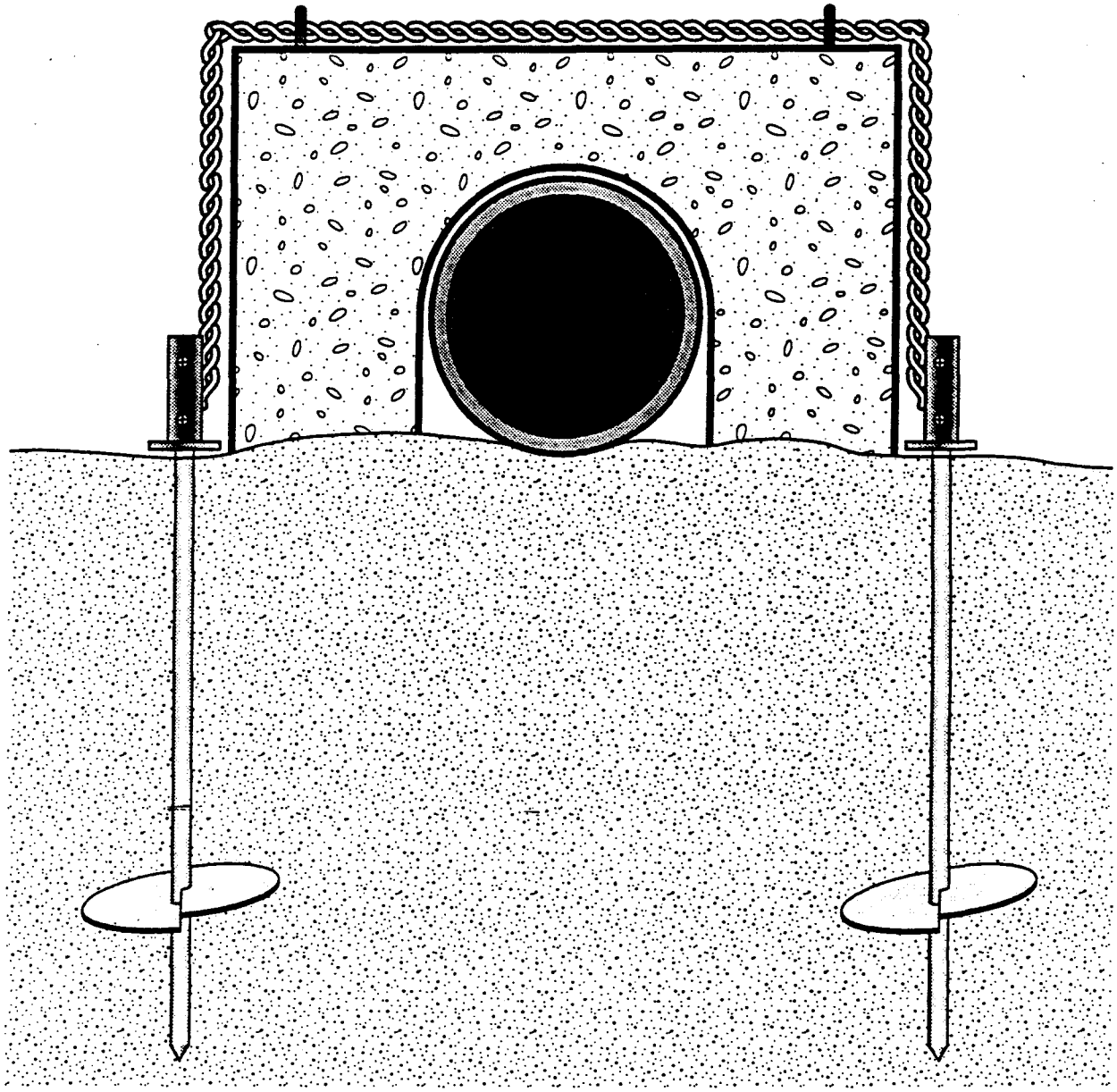

CV9080.a 03/03/94

Figure 3-8

Pipeline Anchor Assembly

Chevron El Segundo Ocean Outfall

4.0 ENVIRONMENTAL SETTING

The environmental setting of the project location is divided into three sections representing the three distinct locations covered by project activities: the onshore construction site in Long Beach; the pipe transportation route; and the offshore installation site. Environmental setting is discussed separately for each location.

4.1 ONSHORE CONSTRUCTION SITE

The primary site for onshore construction is at the Queensway Bay District of the Port of Long Beach along the southwest shore of the Los Angeles River just north of the Queensway Bridge. Figure 3-3 shows the general location of the site. The site is bordered to the west by Queensway Drive, to the north by vacant land, to the east by the Los Angeles River, and to the south by a restaurant and its paved parking area.

4.1.1 Land Use

The site is a 230,000-square-foot vacant, unpaved, hard compacted dirt lot. The property is completely fenced. The site slopes slightly toward the southeast corner of the property. There are no structures or other capital improvements on the site. A rock berm waterfront has been constructed along the eastern edge of the site. The top of the berm is approximately 8 to 10 feet above the mean lower low water level (SLC 1992). The property is owned by the Port of Long Beach, and was used by Chevron for a pipeline construction and staging area in June 1993. There is no public access through or along the property. The property has not been developed for recreational use. "No swimming, diving, or climbing on rocks" signs are

posted along the shore at the construction site. According to the Port of Long Beach Planning Department, the property is zoned for commercial and recreational use (Gleason 1993). The Planning Department added that short term construction activities, such as this project, have been conducted at the site and are considered to be in accordance with zoning limitations (SLC 1992).

4.1.2 Biological Environment

Based on observations made during a 1992 site tour, there are no wildlife species (plants or animals) at the site itself, with the exception of four unidentified trees (E & E 1992). These trees are located just inside the fence along the Queensway Drive side of the construction site property. No federal- or California State-designated endangered or threatened species are known to exist at the construction site itself (CDFG 1991b).

There are two sensitive species known to be located within approximately 3 miles of the construction site. According to the California Department of Fish and Game's (CDFG) Natural Diversity Data Base, several tiger beetles (Cicindela hirticollis gravida, no federal or state status) have been observed on Terminal Island at a location approximately 3 miles from the construction site (CDFG 1991b).

The Natural Diversity Data Base also reported that the California least tern (Sterna antillarum browni, a federal- and California State-designated endangered species) has nesting colonies on Terminal Island, one located at Reeves Field and the other located at the Terminal Island Landfill site (south of Ferry Street and east of Earle Street). Another least tern colony is reportedly located on Belmont Shores Beach at the foot of Corona Avenue in Long Beach. The two colonies located on Terminal Island are approximately 3 miles from the construction site, and the colony in Long Beach is located approximately 2.75 miles from the construction site (CDFG 1991b).

The least tern is migratory, and is present at its California breeding sites from April through August. Nesting starts in the middle of May and is generally completed by mid-June. The least tern nests in loose colonies on the ground, typically on a beach or exposed tidal flat.

The least tern is sensitive to human activity, choosing nests in areas free of human disturbance, and abandoning its nest readily if disturbed. Feeding occurs primarily in shallow estuaries or lagoons, but a considerable amount also occurs in the near-shore ocean and at the mouths of bays (CDFG 1990b).

4.1.3 Cultural Environment

A records search was performed by the University of California at Los Angeles (UCLA) Institute of Archaeology for Chevron for the marine terminal reconfiguration project. The search included a review of all recorded historic and prehistoric archaeological sites in the vicinity of the operations as well as a review of all known cultural resource survey and excavation reports. In addition, historic maps of the region were checked. No prehistoric sites or other historic archaeological sites were identified near the construction site. The Queen Mary is an historic attraction in the Port of Long Beach about a mile south of the construction site (SLC 1992).

4.2 TOW ROUTE

The tow route is shown in Figure 3-6. The initial portion of the tow route will follow the Los Angeles River into the San Pedro Bay. The pipe will be towed out through the gate between the Middle Breakwater and the Long Beach Breakwater, and out to Santa Monica Bay.

The river is approximately 20 feet deep near the construction site. Depths of the river between the proposed construction site and the Queen Mary range from 10 feet near the northeastern shore to 30 feet in the middle of the channel. Beyond the Queen Mary the depth continues to increase.

4.2.1 Marine Use

The Los Angeles River in the vicinity of the proposed construction site is used primarily by pleasure craft. Across the river from the proposed construction site is the Catalina Cruise

terminal. During the peak summer season, which begins in late April, tour boats run four to five times per day between the hours of 9 a.m. and 8 p.m. Yacht clubs are located on the northeast shore of the Los Angeles River near the opening of the river to San Pedro Bay. No large ships use this section of the river (Rodriquez 1993).

Marine uses in Los Angeles Harbor, San Pedro, and Santa Monica bays include anchorage areas, maneuvering areas, navigable corridors, commercial fishing, and recreational/sport fishing.

4.2.2 Biological Environment

With the exception of the harbor area in San Pedro Bay, the habitats and wildlife species located along the tow route are generally considered characteristic of pelagic and subtidal areas. The pelagic zone is defined as open ocean, with depths too great to support kelp beds (canopy-forming macroalgaes). The subtidal zone extends seaward from the low tide line to the maximum depth that potentially supports kelp beds (CDFG 1988).

Pelagic species primarily include phytoplankton, zooplankton, fish, and the macrofauna discussed in further detail below. Pelagic vegetation is limited to phytoplankton, which has been observed to increase in abundance with increasing distance offshore (CDFG 1988). Zooplankton in the tow route area has been found to be typical of offshore southern California waters, and includes various types of fish eggs and larvae in addition to microorganisms. One net sampling study conducted in the Santa Monica Bay near the project area found the most abundant larvae in surface samples to be Atherinidae, which includes topsmelt (Atherinops affinis), jacksmelt (Atherinopsis californiensis), and grunion (Leuresthes tenuis). Net samples from the middle and lower portions of the water column contained predominantly white croaker (Briaenidae), flat fish, queenfish (Seriphus politus), northern anchovy (Engraulis mordax), surfperch (Embiotocidae) and goby (Lythrupnus dalli) (MBCI 1979, 1982). In general, higher numbers of fish eggs and larvae were found in September than in April (MBCI 1979). The abundance of the different species of adult fish also varied with season and depth (MBCI 1982).

In the subtidal zone, kelp and other forms of macroalgae are found in addition to phytoplankton (CDFG 1988). Zooplankton in the subtidal zone are probably similar to those in the pelagic zone. Fish species inhabiting this zone include grunion (Leuresthes tenuis), generally found in water between 15 and 40 to 60 feet deep, and rockfish (Sebastes sp.), found in kelp beds, in addition to other species (SLC 1992). Kelp beds and macrofauna associated with the subtidal zone are discussed in greater detail below.

Kelp Beds

Based on field data CDFG collected in 1992, several kelp beds are in the vicinity of the tow route, though in areas shallower than those along the tow route. Near Point Fermin, kelp beds only occur down to 40 feet whereas the tow route is at least 60 feet deep. Along Point Vincente, kelp beds only occur down to 50 feet whereas the tow route is some 120 feet deep (Figure 4-1) (SLC 1992; Bedford 1993). The locations of the kelp beds remain constant from year to year, but the size of the beds can fluctuate.

Commercial and Sport Fisheries

Various types of commercial fishing occur along the tow route and in the project area (Nitsos 1992). On the basis of 1991 commercial fishing data and assuming that fish brought into a given port are caught near that port, the species of fish listed in Table 4-1 are likely to be caught in commercial fisheries along the tow route (CDFG 1991a; Eres 1992).

According to a representative of CDFG, sport fishing also commonly occurs along the tow route. Popular sport fishing species include rockfish (Sebastes sp.), bonito (Sarda chiliensis), various flatfish, and California halibut (Paralichthys californicus) (Nitsos 1992).

Mammal Species Potentially Found Along the Tow Route

The seals and sea lions listed in Table 4-2 have habitat ranges that include the Santa Monica Bay and San Pedro Bay areas (CDFG 1990a). According to a 1978 study conducted by the University of California at Santa Cruz, whales and dolphins have also been observed in Santa

Monica Bay, although not in large numbers. Minke whales (Balaenoptera acutorostrata) and pilot whales (Globicephala macrorhynchus) have been observed in the summer months, primarily off Palos Verdes and in deeper waters. Dolphins and pilot whales have been sighted in autumn, primarily off of Point Dume and Point Vincente (SLC 1992). Gray whales (Eschrichtius robustus), a federal endangered species, reportedly migrate through Santa Monica Bay from late December to mid March (UCSC 1978; Collins 1991).

Bird Species Potentially Found Along the Tow Route

Given the presence of nesting colonies on Terminal Island, it is likely that the California least tern fishes within the San Pedro Bay and in the area of the tow route. The bird species listed in Table 4-3 are also found frequently to rarely in habitat ranges that include the tow route. A description of each species' habitat and state or federal management status is given in the table.

4.2.3 Cultural Environment

No prehistoric or historic archaeological sites were identified by the UCLA Institute of Archaeology during the records search conducted for the marine terminal reconfiguration project. There are 96 reported or known shipwrecks along or near the proposed tow route (SLC 1992). The exact locations of most of these have not been determined.

4.3 OFFSHORE INSTALLATION SITE

The marine use and biological and cultural environment of the offshore installation site are described below.

4.3.1 Marine Use

Beneficial uses of the Santa Monica Bay include industrial service supply, navigation, contact and noncontact water recreation, commercial and sport fishing, preservation of rare and endangered species, marine habitat, shellfish harvesting, and fish spawning (SWRCB 1990).

The SCE and Scattergood outfalls and the Chevron El Segundo marine terminal are in the vicinity of the ocean outfall. Activities associated with the marine terminal include vessel anchorage and maneuvering and routine terminal maintenance.

Recreational uses of the project area include boating and sportfishing. The area has historically been a poor surfing area except during winter storms which will not occur during the construction period.

4.3.2 Biological Environment

The biological environment in the project area is very similar to that along the tow route. The fisheries, mammalian and avian species, and pelagic and subtidal habitats in the project area were discussed above with reference to the tow route. A few additional site-specific facts from previous studies are given below. More specific information will be obtained from surveys that will be conducted in accordance with agency requirements, which are currently under development.

The project area is a soft bottom habitat typical of semiprotected, sandy-bottom areas off southern California. Surveys conducted for the Chevron El Segundo Refinery and the Scattergood and SCE Generating Stations provide some location-specific information about the invertebrates, fish and marine mammals inhabiting the project area.

Invertebrates

Infauna of the soft bottom, subtidal habitat of the Santa Monica Bay is typically dominated by polychaete worms. This habitat also supports crustaceans, mollusks, and echinoderms. A 1979 survey conducted for Chevron by MBC Applied Environmental Sciences showed that the nearshore benthic community near the outfall is dominated by the polychaete worm Apoprionospio pygmaeus (MBC 1979). The survey was conducted in both spring and fall, and the eight sample sites were located along a 25-foot-depth isobath just offshore of the Chevron El Segundo Refinery. Table 4-4 presents a summary of the species identified during the survey. The 1979 study also included a trawl survey that covered the area 2 kilometers

north and south of Chevron's intake and discharge pipes. Invertebrate macrofauna captured by the trawl include the spotted bay shrimp (Crangon nigromaculata), a parasitic isopod (Lironeca vulgaris), swimming crab (Portunus xantusii), sand star (Astropecten sp.), and crab (Cancer anthonyi) (MBC 1979). Subsequent surveys conducted as part of Chevron's ongoing monitoring program for its NPDES permit show similar infaunal community assemblages, but species abundance and dominance vary (MBC 1992).

Benthic invertebrates collected at the Hyperion Treatment Plant outfall (Station A2) about 0.5 mile from the project area are listed in Table 4-5 (City of Los Angeles 1992).

Fish

In the 1979 trawl survey described above, the most abundant fish species found during the spring sampling were queenfish (Seriphus politus), white croaker (Genyonemus politus), and northern anchovy (Engraulis mordax). The following summer, the white croaker and northern anchovy were important, followed by white seaperch (Phanerodon furcatus) (MBC 1979). Fish fauna caught in trawls during the survey are listed in Table 4-6.

Marine Mammals

The California sea lion (Zalophus californianus) and dolphin (species not noted) have been observed in the project area (Radian et al 1989; SLC 1992).

4.3.3 Cultural Environment

No prehistoric or historic archaeological sites were identified by the UCLA Institute of Archaeology. Two shipwrecks, the Sea King, an oil screw sunk in 1968, and Crowley #64, a barge sunk in 1949, are reportedly in Santa Monica Bay east of the marine terminal (SLC 1992).

Table 4-1

FISH POTENTIALLY CAUGHT IN COMMERCIAL FISHERIES LOCATED ALONG TOW ROUTE

albacore tuna	barred surfperch	bigeye thresher shark
bigeye tuna	black abalone	black rockfish
black surfperch	blackfin tuna	blackgill rockfish
blacksmith	blue rockfish	blue shark
bluefin tuna	bocaccio rockfish	bolina rockfish
bonito shark	brown smoothhound shark	butter sole
cabezon	California barracuda	California halibut
California jackknife clam	California lizardfish	California sheephead
California spiny lobster	chilipeppper rockfish	chinook salmon
claws crab	coho salmon	common thresher shark
cowcod rockfish	dolphinfish	Dungeness crab
eel	flyingfish	ghost shark
giant sea bass	green abalone	group red rockfish
halfmoon	jacksmelt	jumbo squid
kelp greenling	lingcod	leopard shark
louvar	mackerel	marine worms
market squid	mussel	northern anchovy
ocean whitefish	olive rockfish	opah
opaleye	Pacific angel shark	Pacific bonito
Pacific butterfish	Pacific hade	Pacific herring
Pacific Ocean shrimp	Pacific sardine	petrale sole
purple sea urchin	pink abalone	queenfish
red abalone	red rockfish	red rock shrimp
ridgeback prawn	rock crab	rockfish
sablefish	sanddab	sargo
sea cucumber	sea snail	sea urchin
silversides	shovelnose guitarfish	skate
skipjack tuna	splitnose rockfish	sole
soupfin shark	spider crab	spot prawn
spotted scorpionfish	staghorn sculpin	starry flounder
starry rockfish	swordfish	thornyhead
turbot	wahoo	white croaker
white seabass	white shark	yellowfin tuna
yellowtail	yellowtail rockfish	

Table 4-2

SEAL AND SEA LION SPECIES POTENTIALLY LOCATED ALONG TOW ROUTE

Species	Status	Location/Habitat
Northern Fur Seal *Callorhinus ursinus*	Protected[a]	Generally pelagic (11 to 17 miles off-shore); occasionally observed on sand or cobble beaches.
California Sea Lion *Zalophus californianus*	Protected[a]	Common from pelagic and near-shore waters to surf zone and beaches.
Harbor Seal *Phoca vitulina*	Protected[a]	Common in subtidal and intertidal habitats.
Northern Elephant Seal *Morounga angustirostris*	Protected[a,b]	Occur in pelagic coastal waters. Not likely to be located in area of tow route, since there are no rookeries in the area and since the seals fish at a minimum depth of 200 meters.

[a] Protected under Federal Marine Mammal Protection Act of 1972.
[b] California Fully Protected.

Table 4-3

BIRD SPECIES POTENTIALLY LOCATED NEAR TOW ROUTE

Species	Status	Location/Habitat
Red-throated Loon *Gavia stellata*	None	Found in marine subtidal and estuarine habitats from October to April.
Pacific Loon *Gavia artica*	None	Found primarily during November and May in marine subtidal and pelagic habitats.
Common Loon *Gavia immer*	California Species of Special Concern	Common in estuarine and subtidal marine habitats from September to May. Migrants found along coast and off-shore in November and May.
Horned Grebe *Podiceps auritus*	None	Common from October through April in marine subtidal and estuarine habitats.
Eared Grebe *Podiceps nigricollis*	None	May be found in marine subtidal habitats from September to May.
Western Grebe *Aechmophoros occidentalis*	None	Common in marine subtidal and estuarine habitats from October to May.
Clark's Grebe *Aechmophoros clarkii*	None	Common in marine subtidal and estuarine habitats from October to May.
Pelagic Cormorant *Phalacrocorax pelagicus*	None	Fairly common in marine subtidal habitats.
Oldsquaw *Clangula hyemalis*	Harvest Species	Flocks in estuarine and marine habitats, usually near rocky shores.
Black Scoter *Melanitta nigra*	Harvest Species	Uncommon winter resident in estuarine and near-shore marine waters.
Surf Scoter *Melanitta perspicillata*	Harvest Species	Common from October to April in estuarine and near-shore marine waters.
White-winged Scoter *Melanitta fusca*	Harvest Species	Uncommon winter resident in estuarine and marine waters.
Common Goldeneye *Bucephala clangula*	Harvest Species	Rare to fairly common in near-shore marine habitats.

Table 4-3, cont.

BIRD SPECIES POTENTIALLY LOCATED NEAR TOW ROUTE

Species	Status	Location/Habitat
Ruddy Duck Oxyura jamaicensis	Harvest Species	Found occasionally in marine waters near shore, but generally in fresh water.
Royal Tern Sterna maxima	None	Common winter visitor to offshore waters and along coasts.
Elegant Tern Sterna elegans	California Species of Special Concern	Fairly common summer visitor to inshore coastal waters.
Common Tern Sterna hirundo	None	Migrates along coastal areas in spring and autumn, particularly in inshore ocean waters.
Forster's Tern Sterna forsteri	None	Common to abundant in subtidal waters.
Common Murre Uria aalge	None	Irregular winter visitor, found in subtidal and pelagic habitats off of rocky coasts.
Cassin's Auklet Ptychoramphus aleuticus	None	Fairly common in pelagic waters.
Rhinoceros Auklet Cerohinca monocerata	California Species of Special Concern	Occurs in subtidal and pelagic waters.
Brown Pelican Pelecanus occidentalis	Federally Endangered	Found in estuarine, marine subtidal, and marine pelagic habitats.
Least Tern Sterna antillarum	Federally Endangered	Breeding colonies located in Los Angeles area. Feeds in near-shore and pelagic ocean areas.

Source: California Department of Fish and Game, California's Wildlife, Volume II, Birds, November 1990.

Table 4-4

SUMMARY OF INVERTEBRATE SPECIES FOUND AT THE PROJECT SITE

Rank	Scientific Name	Common Name	Mean Density	Relative Abundance
1	Apoprinospio pygmaeus	polychaete worm	41.15	45.2
2	Megaluropus longimerus[1]	gammaridean amphipod	7.3	8.0
3	Euphilomedes longiseta	ostracod	6.95	7.6
4	Siliqua sp.	clam	4.4	4.8
5	Solen sp.	clam	3.4	3.7
6	Tellina sp.	clam	3.4	3.7
7	Macoma sp.	clam	2.4	2.6
8	Synchelidium sp.	gammaridean amphipod	2	2.2
9	Paraphoxus epistomus[2]	gammaridean amphipod	2	2.2
10	Leptocuma forsmani	cumacean	1.8	2.0
11	Diastylopsis tenuis	cumacean	1.7	1.9
12	Paraonella platybranchia	polychaete worm	1.7	1.9
13	Dispio uncinata	polychaete worm	1.6	1.8
14	Munna ubiquita	isopod	1	1.1
15	Spiophanes bombyx	polychaete worm	1	1.1
16	Bathycopea granulatus	isopod	0.95	1.0
17	Olivella baetica	snail	0.95	1.0
18	Mediomastus sp.	polychaete worm	0.9	1.0
19	Edotea sublittoralis	isopod	0.9	1.0
20	Isocheles pilosus	hermit crab	0.9	1.0
21	Tivela stultorum	clam	0.9	1.0

1 now Gibberosus myersi
2 now Rhepoxynius mensiezi

Source: MBC 1979

Table 4-5

INVERTEBRATES FOUND IN SANTA MONICA BAY
JULY 1991 - JANUARY 1992

Cnidaria
Edwardsia sp.

Nemertea
Carinoma mutabilis
Lineidae
Tubulanidae

Annelida (All Polychaeta)
Ampharete labrops
Anotomastus gordiodes
Apoprionospio pygmaea
Chaetozone sp.
Chone veleronis
Euclymaninae sp.
Eusyllis transecta
Goniada littorea
Leitoscolopios pugettensis
Lumbrineris limicola
Magelona sacculata
Mediomastus sp.
Montioelline tessellata
Nereis procera
Onuphis sp.
Owenia collaris
Paraprionospio pinnata
Platynereis bicanaliculata
Praxillella pacifica
Prionospio sp.
Scoloplos acmeceps
Sigalion spinosa
Spiochaetopterus costarum
Spiophanes bombyx
Spiophanes missionensis
Sthenelanella uniformis
Strablosoma sp.

Mollusca
Aspariscala bellastriatum
Balcis rutila
Nassarius perpinguis
Neverita reclusiana
Nitidiscala sp.
Odostomia (Evalea) sp.
Riotaxis punctocaelatus
Sinum scopulosum
Terebra pedroana
Macoma yoldiformis
Modiolus rectus
Parvilucine tenuisculpta
Solen sicarius
Tellina modesta

Arthropoda
Bathylebaris sp.
Calanoida
Diastylis sp.
Hemilamprope californica
Ampelisca brevisimulata
Ampelisca cristate microdentata
Ampelisca sp.
Carapus tubularis
Hippomedon sp.
Ischyrocarus sp.
Monoculodas hartmanae
Photis brevipas
Photis californica
Photis conchicola
Photis sp.
Rhepoxynius manziesi
Tiron biocellata
Cancer anthonyi
Megalope sp. (larvae)
Prototrygaeus jordani

Brachiopoda
Glottidia albida

Echinodermata
Lovenia cordiformis

Table 4-6

FISH TRAWL SURVEY SUMMARY

Scientific Name	Common Name	Number Captured April	Number Captured September	Top Ranks April	Top Ranks September
Seriphus politus	queenfish	1881	75	1	5
Genyonemus lineatus	white croaker	906	598	2	2
Engraulis mordax	northern anchovy	635	1251	3	1
Hyperprosopon argenteum	walleye surfperch	557	7	4	-
Cymatogaster aggregata	shiner surfperch	68	33	5	7
Syngnathus exilis	pipefish	40	15	6	8
Menticirrhus undulatus	California corbina	29	-	7	-
Phanerodon furcatus	white surfperch	27	145	8	3
Paralichthys californicus	California halibut	16	9	9	10
Pleuronichthys verticalis	hornyhead turbot	6	5	10	-
Peprilus simillimus	Pacific butterfish	5	15	-	8
Embiotoca jacksoni	black surfperch	4	-	-	-
Citharichthys stigmaeus	speckled sanddab	4	69	-	6
Umbrina roncador	yellowfin croaker	3	-	-	-
Pleuronichthys ritteri	spotted turbot	3	1	-	-
Myliobatis californica	bat ray	2	2	-	-
Damalichthys vacca	pile surfperch	2	3	-	-
Triakis semifasciata	leopard shark	1	-	-	-
Anchoa compressa	deepbody anchovy	1	-	-	-
Odontopyxis trispinosa	pigmy poacher	1	-	-	-
Paralabrax nebulifer	barred sand bass	1	1	-	-
Micrometrus minimus	dwarf surfperch	1	-	-	-
Heterostichus rostratus	giant kelpfish	1	-	-	-
Pleuronichthys coenosus	C-O turbot	1	-	-	-
Synodus lucioceps	California lizardfish	-	79	-	4
Xystreurys liolepis	fantail sole	-	4	-	-
Hypsopsetta guttulata	diamond turbot	-	2	-	-
Pleuronichthys decurrens	curlfin turbot	-	1	-	-
Totals		4168	2316		

Source: MBC 1979

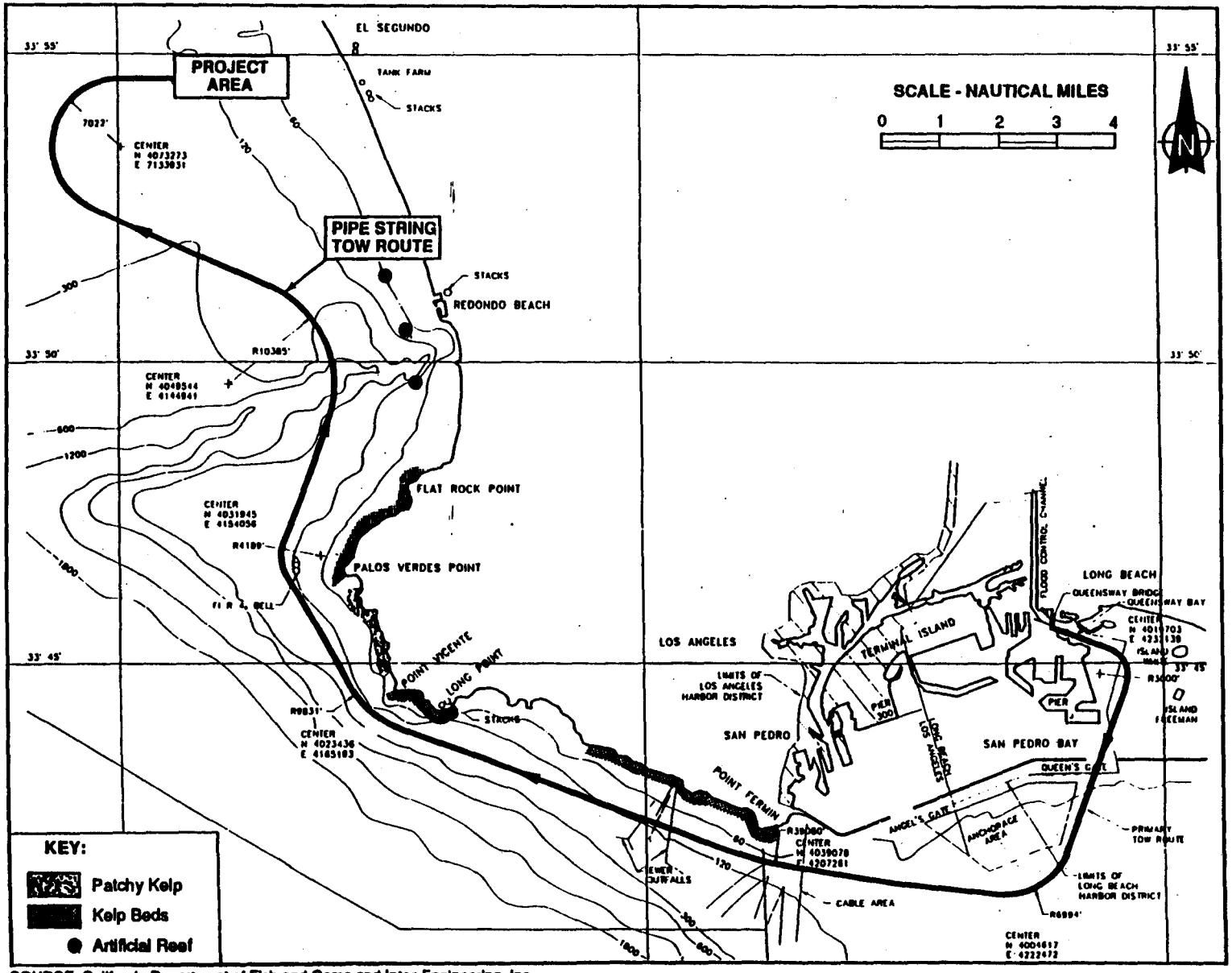

SOURCE: California Department of Fish and Game and Intec Engineering, Inc.

Figure 4-1

LOCATION OF KELP BEDS AND ARTIFICIAL REEFS ALONG TOW ROUTE AND IN PROJECT AREA

5.0 ENVIRONMENTAL IMPACTS

This section presents discussions of environmental impacts that may result from the proposed project. The discussion is divided into the three phases of construction (onshore construction, pipe transportation, and offshore installation) and the operation of the extended ocean outfall.

5.1 EARTH

A description of the project's potential impacts on soil and the seafloor are provided below.

5.1.1 Onshore Construction

The onshore construction will not require development of permanent structures or alteration of the existing site, and is not expected to result in impacts on the soil. There is the potential for soil contamination from wastes generated (e.g., used oil, metal shavings) during construction; however, the construction contractor will be required to handle wastes properly to minimize the potential for soil contamination. The final construction plan submitted by the contractor will include a list of chemicals to be used during construction.

Construction of the pipe will require the use of an onshore roller bed and a transition ramp. These ramps will be placed temporarily on the site and will not require alteration of the existing site. The transition ramp will be placed over the rock berm when the launch is imminent. Chevron will use the transition ramp design used in the successful marine terminal reconfiguration project. Chevron has specified that the pipe support rollers for the transition ramp will not disturb the armor rocks. Chevron also plans to restore the

construction site to its preconstruction condition, which includes repairing any damage done to the rock berm during construction activities.

5.1.2 Pipe Transportation

The shallowest point of the tow will be during the launch. Channel depth adjacent to the construction site is approximately 20 feet. A detailed survey of the launch area in Queensway Bay was conducted during the recent marine terminal reconfiguration project and will be used for the proposed project. It included continuous bathymetric, sub-bottom profiling, and magnetometer and side scan sonar data gathering. Chevron has indicated that all efforts will be taken to prevent contact with the channel bottom during the launch. Any disturbance to channel sediments will be temporary due to the fact that the channel experiences considerable siltation from the Los Angeles Flood Channel and, as a result, frequent dredging to support transport operations from Long Beach to Catalina Island (SLC 1992).

The tugs will follow shipping channels and be in open water that is between 60 and 120 feet deep. The pipe will be towed at a controlled depth; the top of the line will be 8 feet below surface to accommodate the 20-foot depth at the connection point. The pipe will not come in contact with the seafloor or in any way alter earth conditions or topography. In the event of an emergency, tugs may lower the tow string temporarily to rest the pipe on the seafloor. Such contact will be controlled, limited, and temporary and should not cause any significant impacts.

5.1.3 Offshore Installation

Sediments will be temporarily disturbed by construction vessel and pipe anchors and by pipe placement and fitting. Seafloor sediments will be disturbed when construction vessels are anchored and the pipe extension's saddle anchors are installed.

The derrick barge will deploy a four-point mooring system at each anchoring location. An anchor support tug will assist with barge anchor deployment and recovery to enable proper

derrick placement while minimizing bottom drag and sediment agitation. It is anticipated that the barge will be anchored approximately 11 times during the project.

The helical anchors used to anchor the pipe to the sea floor will be drilled into the bottom at slow speeds (approximately 5 revolutions per minute) to minimize disturbance to the sediments. These activities will disturb a small quantity of sand, but the sand is expected to settle quickly and without permanent effects.

The pipe will be lowered in a controlled manner by removing buoys along its length. This will enable the pipe to be lowered into place progressively and will help minimize disturbances of the seafloor sediments.

When the extension is fitted to the existing outfall pipe with a transition piece, sand will be removed from the end of the existing diffuser, inside the existing diffuser, and the area immediately around the end of the diffuser where the transition piece will be placed. The sand will be removed by water and/or air lifting, and will be discharged in the area adjacent to the outfall. As discussed in Section 3, approximately 37 cubic yards of sand will be displaced during construction.

These disturbances are expected to be temporary and will not result in significant impacts to the seafloor.

5.1.4 Operation of the Outfall

The outfall pipe will be extended from approximately 300 to 3,500 feet, and will be approximately 5 feet in diameter (see Figure 3-1). It is likely that some sand will collect around the outfall pipe over time; the amount and location of sand deposition will vary with changing currents and sea condition. However, the pipe's presence will not cause an appreciable interruption of the local sediment transport regime; any effects that may occur would be limited to the immediate area adjacent to the pipe itself (Moore 1993).

Changes to surface relief features will not impact beneficial uses of the proposed project area or change the character of the habitat outside the immediate location of the pipe, which is a small area relative to the entire bay. Therefore, the proposed project will not pose a significant impact to the site.

5.2 AIR

A description of the project's potential impacts on air quality is summarized below.

5.2.1 Onshore Construction

Several types of machinery will be required for the construction of the pipe. Dozers, sidebooms, mobile cranes, pipe fusing machines, and transport vehicles will all have air emissions. The South Coast Air Quality Management District (SCAQMD) requires permits for the operation of all equipment that use engines greater than 50 horsepower for purposes other than propelling the vehicle or vessel. Cranes or other equipment that have a separate engine besides the one used to move the vehicle will require a permit from the SCAQMD (Quinn 1993; Meras 1993). The permitting process ensures that all emission generating equipment, other than those exempt per SCAQMD Rule 219, comply with the applicable emission limits specified in various SCAQMD regulations. Depending on the specific equipment type, the applicable SCAQMD regulations are intended to limit the emissions of certain criteria pollutants such as nitrogen oxides (NOx), carbon monoxide (CO) and hydrocarbons. Chevron has agreed to meet all SCAQMD requirements.

5.2.2 Pipe Transportation

Tug emissions will not create a significant impact on air quality because the tugs' use will be limited and brief. Tug boats do not require permits from SCAQMD (SLC 1992) because the engines of the tugs are used to move the vessel.

5.2.3 Offshore Installation

During offshore construction, tugs, a derrick barge, and several support vessels will be used. The permitting requirements for this equipment are the same as the requirements for the onshore construction equipment (SLC 1992). Chevron has agreed to meet all SCAQMD requirements.

5.2.4 Operation of the Outfall

Operation of the extended ocean outfall will have no impact on air quality because the extension involves no changes to the treated discharge or the gravity-fed delivery system.

5.3 WATER

A description of the project's potential impacts on water movement and quality is summarized below.

5.3.1 Onshore Construction

The construction site is a graded dirt lot. The construction will not involve re-grading the property or constructing permanent ground cover that might affect run-off patterns. No changes to the channel are required for the pipe construction. Therefore, the onshore construction will not adversely impact water movement or water quality.

5.3.2 Pipe Transportation

The pipe launch and the tow will not adversely affect water movement or water quality. The pipe will arrive clean from the supplier and will not introduce contaminants when it enters the water.

If the pipe is lowered in the event of an emergency during the tow, some disturbance of the seafloor sediments may cause an increase in turbidity. Given the likely conditions that would

cause the pipeline to be lowered (poor weather conditions) the increase in turbidity will be temporary and small relative to surrounding conditions and therefore will not significantly impact water quality.

5.3.3 Offshore Installation

Sediments will be temporarily disturbed by construction vessel and pipe anchors and by pipe placement and fitting, which will temporarily increase turbidity at the project area.

Seafloor sediments will be disturbed when construction vessels are anchored and the pipe extension's saddle anchors are installed. As discussed in Section 5.1.3, anchor support tugs will assist in barge anchor deployment and recovery and the pipe anchors will be drilled at slow speeds to minimize sediment agitation. These activities will disturb an unknown quantity of sand, but the sand is expected to settle quickly.

The pipe will be lowered in a controlled manner by removing buoys along its length. This will enable the pipe to be lowered into place progressively and will help minimize disturbances of the seafloor sediments.

When the extension is fitted to the existing outfall pipe with a transition piece, sand will be removed from inside the existing diffuser, and from the area immediately around the end of the diffuser where the transition piece will be placed. The sand will be removed by water and/or air lifting, and will be discharged in the area adjacent to the outfall. As discussed in Section 3, approximately 37 cubic yards of sand will be displaced during construction. The turbidity caused by sand displacement will be temporary.

The end plate of the existing diffuser will be removed during installation to clean out the diffuser and install a transition piece. The outflow velocity will be reduced during this time and there will be a brief period when effluent will be discharged through the pipe without passing through the diffuser. However, this will be temporary and will not cause a significant impact to water quality.

The installation of the pipe extension will not pose a significant impact to water quality because disturbance to the sediments and discharge of diffused effluent will be temporary and of short duration.

5.3.4 Operation of the Outfall

The existing discharge complies with Chevron's NPDES permit limits set by the RWQCB to protect the beneficial uses of the Santa Monica Bay in accordance with the RWQCB's Basin and Ocean Plans. Permit compliance is evaluated in part by monitoring the effluent, receiving waters, and benthic communities. Under this proposal, there are two proposed material changes to the existing NPDES permit: the location of the discharge point and the design of the diffuser. The effluent will not change in volume or composition as a result of this proposed project. Monitoring programs will be modified to accommodate the new discharge point under the supervision of the RWQCB and other agencies, and will continue to provide a means of evaluating the effectiveness of the system and impacts on beneficial uses of the receiving waters.

The proposed project will improve the existing water quality in the project area, particularly the surf zone, because:

- As described in Section 3.2.1, the initial dilution ratio will increase because of changes to the diffuser design and increased depth at the discharge point; and
- The effluent plume from the outfall will not be trapped nearshore by the thermal barrier created by the SCE and Scattergood outfalls, promoting better dilution and preventing the effluent from entering the surf zone (see Section 2.3.1).

5.4 PLANT AND ANIMAL LIFE

A description of the project's potential impacts on plant and animal life is summarized below.

5.4.1 Onshore Construction

The onshore construction site is not known to be used as a habitat for any plants or animals, except for the four trees located along the fence in the southwestern corner of the property. The trees will be out of the way of most construction activities. Construction vehicles will use the area along the fence as a passageway around the pipe sections.

No sensitive species use the construction site for nesting or other activities. Least tern nesting sites are located approximately 3 miles from the site.

Therefore, the proposed project will not cause a significant impact to plant or animal life at the construction site.

5.4.2 Pipe Transportation

Launch activities may disturb channel sediments as well as biological communities located along the rock berm or in the shallow water near the launch site. No sensitive species have been identified in the vicinity of the construction site. No information is available on other species or communities along the rock berm or in the shallow channel area near the launch site. Frequent dredging of the channel makes it unlikely that significant biological communities will be encountered or affected by launch activities (SLC 1992).

Pipe transportation will not significantly impact plant or animal life. Various pelagic and near-shore species (including marine mammals, fish, and birds) may be encountered during pipe transport but will not be adversely affected. Sensitive species such as the least tern and the brown pelican may feed along portions of the tow route, but due to its short duration, the tow will not cause any long term or significant impacts. As an added precaution, Chevron scheduled the pipe tow in May or June, after the gray whale migration season, to ensure that gray whales are not impacted.

Data from 1993 on the location of kelp beds along the tow route indicate that the pipeline transport will not pass through any kelp areas (Bedford 1993).

5.4.3 Offshore Installation

Offshore installation will not have long-term adverse effects on wildlife or sensitive species. Brown pelicans have been spotted in the project area but construction activities will be short in duration and will not create a significant impact on their feeding. The proposed construction will take place after the gray whale migration season to avoid any impact on the whales. There are no kelp beds in the proposed project area.

Pipe installation will disrupt and cover the seafloor sediments and benthic organisms inhabiting the sediments along and adjacent to the area where the new outfall pipe will be placed. It is impossible to quantify the organisms impacted by the installation, but the area affected will be roughly the length and width of the pipe extension, or approximately 3,200 by 5 feet (not including anchor locations or temporary equipment sites). This area is small relative to the overall habitat of the benthic communities.

Because of the short duration of construction and the small area affected, the impact to benthic communities and other local plant and animal life will not be significant.

5.4.4 Operation of the Outfall

As discussed in Section 5.3.4 under Water Quality Impacts, the existing discharge is monitored rigorously and is in full compliance with Chevron's NPDES permit. Benthic surveys and "mussel watches" indicate no adverse impacts resulting from the discharge (MBC 1991;1992). The proposed project will improve water quality in the receiving waters by increasing the initial dilution ratio and promoting better dilution.

Chevron is currently working with the RWQCB on requirements for baseline data of the benthic community in the proposed project area, and baseline monitoring of the proposed receiving waters to establish baseline conditions. The benthic community is not expected to differ significantly from that near the existing outfall.

No significant impacts on the benthic community are expected to result from the proposed project because:

- The existing discharge has not produced measurable impacts, as documented in regular receiving water monitoring reports prepared for and submitted to the RWQCB (MBC 1991; 1992); and
- The benthic organisms at the proposed discharge point are not expected to differ significantly from those at the existing location.

Similarly, other marine life inhabiting the area will not be adversely impacted by the proposed project because the receiving water quality in the project area will remain within the limits set by Chevron's NPDES permit, and beneficial uses of the receiving waters such as commercial and sport fishing will be maintained.

5.5 NOISE, LIGHT, GLARE, AND LAND USE

A description of the project's potential impacts on noise, light, glare, and land use is summarized below.

5.5.1 Onshore Construction

Onshore construction at the Port of Long Beach will be in a commercial area surrounded by industrial areas and will not increase the ambient noise levels significantly. Noise levels in the Port of Long Beach range from 55 to 62 dBa (SLC 1992). Noise in the area of the proposed construction site originates primarily from ground transportation along Queensway Drive and Highway 710. According to the City of Long Beach Noise Ordinance, typical freeway traffic at 100 feet is approximately 80 dBa. Except for single noise events, such as a passing truck, noise levels in and around the Port area are generally within acceptable limits for industrialized areas as specified by the City of Long Beach General Plan (SLC 1992).

According to the Noise Control Officer for the Long Beach Environmental Health Department, the area surrounding the proposed construction site does not include residential or other areas of potential concern with respect to noise (SLC 1992). The Long Beach

Environmental Health Department restricts construction noise to specified hours during the work week (SLC 1992). These hours are: weekdays 7 a.m. to 7 p.m.; Saturdays 9 a.m. to 6 p.m.; and Sundays 9 a.m. to 6 p.m. with a variance. Chevron has agreed to avoid construction noise outside of these hours.

Limitations on construction hours will also affect the potential for light and glare impacts. Given the short duration of the construction activities and the area in which the site is located, light and glare should not create a disturbance to people near the construction site.

Onshore construction will be consistent with the designated land use of the construction site at the Port of Long Beach. The property is zoned for commercial/recreational use, but according to the Port of Long Beach Planning Department, short-term construction activities are consistent with the land use designation (SLC 1992).

5.5.2 Pipe Transportation

The launch and tow route are in an area commonly used by other vessels. Pipe towing and installation will not result in increased noise levels or exposure of people to severe noise.

Light and glare will not be significant during the tow. Lights on the pipe string buoys will be used to warn other vessels, but these should not create any adverse impacts.

The pipe launch and tow will be consistent with existing uses of the area and will not result in a significant impact.

5.5.3 Offshore Installation

Installation will occur between approximately 300 and 3,500 feet offshore during daylight hours. Adverse noise impacts to residents onshore are very unlikely.

Light and glare will not be significant during the installation.

Installation activities will interfere temporarily with other uses of the area, such as boating and fishing.

5.5.4 Operation of the Outfall

The proposed project will not change the operation of the outfall or the noise level associated with it.

The proposed project will not result in the production of new light or glare.

Operation of the extended outfall will be consistent with existing use of the parcel and will not result in a significant impact to marine use of the parcel.

5.6 NATURAL RESOURCES

A description of the project's potential impacts on natural resources is summarized below.

5.6.1 Onshore Construction

The onshore construction will use motorized equipment. However, the short duration of the construction activities will not significantly increase the use of fossil fuels or other natural resources.

5.6.2 Pipe Transportation

The short distance and amount of time required to tow the pipe will not cause a significant increase in the use of fossil fuels or other natural resources.

5.6.3 Offshore Installation

No significant increase in the use of fossil fuels or other natural resources is associated with the relatively short installation period.

5.6.4 Operation of the Outfall

The outfall extension will not change the capacity of the system or the character of the discharge and therefore will not alter the rate of use or depletion of natural resources. The system will be gravity-fed, which will not consume additional energy.

5.7 RISK OF UPSET

5.7.1 Onshore Construction

No pipelines or aboveground tanks are located on the site. The construction will not involve digging or drilling that might upset unknown pipelines, cables, or tanks. Compressed gas cylinders will be used during construction of the transition ramp. Fuel will be kept on site for construction vehicles. The use of these materials and equipment does involve some potential for accidents. This risk, however, is typical for construction projects involving heavy equipment. These potential impacts are also very localized and would not affect the general public. The risk of upset associated with onshore construction is, therefore, not significant.

Delivery of the 50-foot-long pipe sections will be along Queensway Drive, an access road that runs between the site and Harbor Scenic Drive. Use of the access road will not interfere with emergency vehicle access to the area. The Port of Long Beach typically handles industrial traffic of 8,000 to 10,000 trucks per day. The Port of Long Beach Planning Department does not have any special concerns regarding the delivery of these pipe sections (Gleason 1993). The construction site access road does not pose any maneuvering difficulties for the length of pipe being delivered.

5.7.2 Pipe Transportation

The launch path crosses six Chevron pipelines and one Shell pipeline. The pipelines are buried 15 to 20 feet below the channel bottom surface and they are not at risk of contacting the towed pipeline. The channel depth in the area of these pipelines is approximately 20 feet. Although the pipe may come in contact with the bottom of the channel during the launch, the

pipe will not impact these buried pipelines because the depth of the pipe during towing will not be more than 8 feet from the water surface.

As discussed in Section 5.1.2, Chevron will consult a recent survey of the launch path that includes bathymetric, side scan sonar, and magnetometer surveys. Any obstructions identified in these surveys will be avoided during the pipe launch.

Chevron is also requiring that bottom obstructions such as submarine cables and pipelines along the tow route be considered in contingency plans developed by the towing contractors. Therefore, if the pipe needs to be lowered in an emergency, tow operators will be able to avoid these obstructions.

The submerged pipe will be marked with buoys and/or lights and Chevron will contact the U.S. Coast Guard to issue a Notice to Mariners to assure marine traffic safety during the tow. Chevron will also inform the Los Angeles County Fisherman's Association and the San Pedro Fisherman's Cooperative Association of the tow and offshore construction activities.

5.7.3 Offshore Installation

During installation, recreational use of the area will be restricted to prevent accidents during pipe installation.

To reduce to possibility of having any of the construction vessels drop an anchor on or otherwise disturb other pipelines near the construction area, a survey vessel will identify and place surface buoys every 300 feet along existing pipelines located within 1,500 feet of the area prior to starting construction.

Construction and support vessels carry small quantities of fuel. If there were a release of oil during installation, the vessels would be covered under Chevron's Oil Spill Contingency Response Plan (February 1993), and response procedures (e.g., notification, containment, recovery, and disposal) would be initiated and implemented in accordance with this plan. Some containment equipment is located on the construction and support vessels. Equipment is

also kept at Chevron's Oil Spill Warehouse located at the refinery and is immediately available for deployment. The El Segundo Refinery can obtain additional support from the Clean Coastal Waters oil spill response cooperative.

5.7.4 Operation of the Outfall

The proposed project will not result in any change in the risk of upset. The effluent is monitored and can be diverted if needed. The operation of the outfall will be subject to monitoring and inspections to ensure the integrity of the pipe. The marine terminal is approximately 4,000 feet from the proposed outfall location, and tanker traffic associated with the terminal will not affect the outfall's operation.

5.8 POPULATION AND HOUSING

A description of the project's potential impacts on population and housing are summarized below.

5.8.1 Onshore Construction

The proposed project will not affect the human population or housing in the project area. Onshore construction will take place in a commercial area surrounded by industrial areas and will be brief, so housing or population will not be impacted.

5.8.2 Pipe Transportation

Offshore towing will not affect human population or housing.

5.8.3 Offshore Installation

Offshore installation will not affect human population or housing.

5.8.4 Operation of the Outfall

Operations will not include changes that will affect either housing or human population issues.

5.9 TRANSPORTATION AND CIRCULATION

A description of the project's potential impacts on transportation and circulation are summarized below.

5.9.1 Onshore Construction

Land transportation will not increase substantially during onshore construction, which will take approximately six weeks in a commercial and industrial area that can accommodate construction-related vehicles and traffic. Daily truck traffic in the Port of Long Beach is typically about 10,000 trucks (Gleason 1993); vehicle traffic associated with the project will be insignificant relative to the overall traffic load. Most of the vehicles required for the construction will remain at the property. The pipe sections will be delivered to the site in 50-foot sections through an access gate from Queensway Drive at the northern end of the property. The Port of Long Beach Planning Department does not have any special concerns about traffic in the area of the construction site or about delivery of these long pipe sections (SLC 1992; Gleason 1993). Chevron plans to deliver the pipelines to the construction site during weekdays to avoid weekend and holiday tourist traffic.

5.9.2 Pipeline Transportation

Chevron will submit a Local Notice to Mariners through the U.S. Coast Guard prior to the launch. and plans to launch the pipelines on a weekday night to avoid peak recreational marine traffic. Launch activities and towing in Queensway Bay and the San Pedro Bay areas will be coordinated by the Port of Long Beach Pilot's Office. The tow will be halted to give passage to other vessels as needed. No impact to shipping traffic is expected from the pipe tow based on recent experience.

Pipe transport could disrupt commercial fishing activities along the tow route; towing, once it begins, will last approximately one day. Chevron, in addition to the Local Notice to Mariners, will contact the Los Angeles County Commercial Fisherman's Association and the San Pedro Fisherman's Cooperative Association to inform them of the operation, including tow route, date, and times. The advance notice will minimize impact on commercial fishing.

5.9.3 Offshore Installation

Offshore construction will restrict recreational craft from the proposed project area, but only for a brief period. Vessel traffic at the marine terminal will not be affected by the offshore construction because the proposed project area is well inshore of the berths and traffic lanes.

Offshore construction will not significantly impact traffic in the proposed project area.

5.9.4 Operation of the Outfall

The proposed outfall extension will not impact recreational or marine terminal vessel traffic. The pipe will lay on the bottom of the ocean and will not interfere with recreational boating or commercial fishing in the area. The proposed extension is too close to shore to affect marine terminal vessel traffic.

5.10 PUBLIC SERVICES, ENERGY, AND UTILITIES

The proposed project will not affect the need for public services or impact public services directly. Government agencies will be notified of activities, or may provide coordination during the project, but the level of services needed will not be altered.

5.10.1 Onshore Construction

The onshore construction will not have a significant effect on public services. Emergency access to the area will not be compromised by onshore construction activities. Construction

activities will be short in duration and will not result in substantial use of energy or fuel. Onshore construction will not significantly affect utilities.

5.10.2 Pipe Transportation

Coordination by the Port of Long Beach Pilot's Office will be required for the tow, but this does not constitute an adverse impact on public services. Pipe transportation will not use substantial energy and will not affect utilities.

5.10.3 Offshore Installation

No significant impacts on public services will result from offshore installation. Energy consumed by the proposed project is consistent with that of ongoing activities and routine maintenance and repair of the outfall and does not constitute a substantial increase in energy used or increase in demand upon existing sources of energy. Utilities will not be affected by offshore installation.

5.10.4 Operation of the Outfall

The operation of the outfall will be subject to monitoring, inspections and oversight by public agencies, but the effect on public services will be no more significant than under its current operation. No new sources of energy will be developed as a result of this project. The proposed project will not result in the need for new utility systems or alterations in existing utility systems because operations will not undergo significant changes.

5.11 HUMAN HEALTH

The construction, installation, and operation portions of this project will be conducted under California Occupational Safety and Health Administration (CalOSHA) regulations to avoid potential health hazards. All commercial diving will be in accordance with the Association of Diving Contractors safety standards.

5.11.1 Onshore Construction

Construction activities include operation of construction vehicles, pipe fusing, and moving heavy materials and equipment. Because all work will be performed by trained personnel, these activities do not pose any significant risks to human health.

5.11.2 Pipe Transportation

Chevron has stipulated that there be a weather window of five days of no inclement weather prior to launching the pipe. The tow must be planned when no local storms are forecast. Swells must be under 4 feet, and the short wave height must be under 3 feet. Given these safety precautions, pipe transportation will not pose a significant threat to human health.

5.11.3 Offshore Installation

The contractor responsible for offshore construction must submit to Chevron a copy of the contractor's Safety Program. Work will be stopped when conditions endanger the lives or property of the contractor, Chevron, or the public. Offshore construction activities will not pose a significant threat to human health.

5.11.4 Operation of the Outfall

The presence of the effluent plume in the surf zone does not present a human health risk in its existing location; however, by extending the discharge point farther offshore, the possibility of human contact with the effluent plume is significantly reduced (Radian 1989; 1992). The proposed project, therefore, does not represent a significant impact on human health.

5.12 AESTHETICS

A description of the project's potential impacts on aesthetics is summarized below.

5.12.1 Onshore Construction

Onshore construction may temporarily affect the aesthetics of the construction site. However, the site will be cleaned and left in its original state after the construction is completed. Therefore, impacts are not considered to be significant.

5.12.2 Pipe Transportation

Pipe transportation will not affect any scenic vistas or create an aesthetically offensive site.

5.12.3 Offshore Installation

Offshore installation will require that construction vessels be anchored offshore, which will be visible from the shore. However, the construction will be brief and therefore will not significantly affect any scenic vistas or create an aesthetically offensive site.

5.12.4 Operation of the Outfall

The extended outfall will not be visible from the shore and therefore will not have an adverse impact on aesthetics.

5.13 RECREATION

A description of the project's potential impacts on recreation is summarized below.

5.13.1 Onshore Construction

Onshore construction activities will not affect recreational activities. The construction site is fenced and closed to public access. Along the shore around the construction site are "No Fishing" signs. Despite the signs, fisherman have been observed along the banks of the channel near the construction site (SLC 1992). Launch activities will require much of the area to be clear of bystanders. Fishermen will be required to move if they are in the launch

area. The potential short-term displacement of these people will not constitute a significant impact on recreational activities.

5.13.2 Pipe Transportation

Recreational marine vehicles will be advised to stay clear of the pipe as it is being towed, which will last approximately one day. Chevron will issue a Local Notice to Mariners to notify boaters of the launch and tow operations. Interruption to recreation will be brief and temporary, and will not create a significant impact.

5.13.3 Offshore Installation

Very few recreational activities take place in the vicinity of the proposed extension. The area has historically been a poor surfing area except during winter storms which will not occur during the construction period. Recreational craft will be restricted from the project area during construction. However, construction activities will be temporary and will not significantly impact recreational boating or fishing.

5.13.4 Operation of the Outfall

After construction, the extended outfall will not impact existing recreational uses of the proposed project area.

5.14 CULTURAL RESOURCES

A description of the project's potential impacts on cultural resources is described below.

5.14.1 Onshore Construction

No known historic or prehistoric resources are thought to be present at the construction site. Construction will not involve digging or drilling that could disturb unknown buried artifacts. Therefore, no significant impacts to cultural resources are anticipated.

The UCLA Institute of Archaeology recommended a halt-work condition on the permit issued for the marine terminal reconfiguration in 1993; Chevron will apply this condition to this project as well. In the event that unanticipated historic or prehistoric cultural materials or features are encountered, work must stop at the discovery site. A professional cultural resource consultant will be contacted to evaluate the find. In the event any bones of possible human origin are uncovered, the Los Angeles County Coroner must be notified and permitted to investigate the find prior to any further disturbance at the discovery site (UCLA 1992).

5.14.2 Pipe Transportation

Pipe transportation will not impact historic or prehistoric cultural resources. The pipeline will not come into contact with the seafloor except in the event of an emergency. No known archaeological resources are located along the tow route. A halt-work condition was recommended by the UCLA Institute of Archaeology for the transportation phase of the marine terminal reconfiguration project (UCLA 1992) and will be applied to this project.

Numerous shipwrecks have been reported along the tow route. In the event that the pipeline must be lowered during the tow, shipwrecks may be encountered (SLC 1992). Chevron will notify SLC of any shipwrecks encountered and of methods recommended for removing the pipe from such wrecks.

5.14.3 Offshore Installation

No archaeological resources have been identified for the project area (UCLA 1992). No digging or drilling that could disturb unknown buried artifacts will be involved in the installation. A halt-work condition was recommended for the marine terminal reconfiguration project (UCLA 1992), and will also be applied to this project.

The SLC shipwreck database reports two shipwrecks near the project area (SLC 1992). Boat and diver surveys of the two debris fields near the proposed project area conducted in September 1993 did not locate anything resembling a shipwreck.

5.14.4 Operation of the Outfall

The project area does not include any known cultural resources, as discussed above. Therefore, the operation of the extended outfall will not have a significant impact on cultural resources.

5.15 WASTE

5.15.1 Onshore Construction

Some wastes may be generated during onshore construction, such as used oil and debris associated with construction. However, the project activities will not generate significant amounts of waste, and Chevron will be responsible for ensuring that they are disposed of properly. The final construction plan will include a list of chemicals to be used during construction.

5.15.2 Pipe Transportation

Pipe transportation will not generate significant amounts of waste and will not involve the use of potentially hazardous materials.

5.15.3 Offshore Installation

Offshore installation will not generate significant amounts of waste. Any debris resulting from offshore construction will be removed from the project area and disposed of properly. Chevron does not anticipate using any potentially hazardous materials during installation, but the final construction plan will list any chemicals if they are to be used.

5.15.4 Operation of the Outfall

No solid wastes or litter, or use of potentially hazardous materials, will result from operation of the outfall.

5.16 OTHER PROJECTS

The proposed outfall extension will not result in a larger project or series of projects. Once the outfall is extended, its operation will resume without the need for further work to meet the project objectives discussed in Section 2 of this Negative Declaration.

5.17 MANDATORY FINDINGS OF SIGNIFICANCE

The potential environmental impacts of the proposed project are presented in Sections 5.1 through 5-14. As discussed in Sections 2 and 5, the proposed project is designed to improve local water quality by discharging Chevron's treated wastewater farther offshore. Because the discharge will not change in volume or constituents, the outfall extension will provide for greater dilution and reduce the likelihood that discharge will enter the surf zone. Precautions taken during the construction phase of the project will minimize any short term impacts the project might have on the environment.

As a result of the project features and proposed mitigation measures, no significant adverse environmental impacts will result from implementation of the proposed project.

6.0 MITIGATION MEASURES

6.1 PROJECT MITIGATIONS

Chevron has incorporated the following features into the proposed project to mitigate potential impacts:

- To minimize effects on local traffic during the onshore construction phase, oversized equipment will be transported during off-peak hours.
- Onshore construction activities will not involve regrading the lot. This will help ensure that surface runoff from the site does not enter the Los Angeles River or San Pedro Bay.
- The onshore construction site will be restored to its pre-construction condition including repairing any damage done to the rock berm during pipe launch activities.
- HDPE pipe was selected because it can be installed with minimal impacts to the seafloor. The HDPE can be placed without burial and/or extensive trenching; the only sand movement required for the placement of the pipe itself is less than 10 cubic yards removed to install the onshore tie-in spool to the transition spool. No sand displacement is needed for the offshore tie-in spool connection. HDPE also requires no coatings or cathodic protection.
- Chevron will provide baseline data for the proposed discharge area to the RWQCB, CDFG and other appropriate agencies. Chevron is currently working with the RWQCB to determine what data will be provided.
- To improve the water quality of the receiving water, the new diffuser was designed to have a higher dilution ratio than the existing diffuser.

- Chevron has defined a weather window of five days of no inclement weather for the pipe tow to avoid accidents caused by poor visibility and inclement conditions. The project will be scheduled at a time when no local storms are forecast.

- Chevron will require towing contractors to prepare contingency plans that identify submarine cables and pipeline along the tow route. In the event that the pipe must be lowered in an emergency, tow operators will avoid these obstructions.

- To minimize impact on commercial fishing and recreational boating, a Notice to Mariners will be issued, and the Los Angeles County Commercial Fisherman's Association and San Pedro Fisherman's Cooperative Association will be contacted to inform them of tow and offshore construction times.

- Buoys with lights will be used to increase the visibility of the pipe string during towing which should reduce the potential for collision.

- A marine vehicle will escort the towing vessel to ensure that pleasure craft do not interfere with towing.

- By constructing the pipe onshore, Chevron will reduce the amount of offshore construction activity needed for the proposed project. Therefore, construction barges and other vessels will spend a minimum amount of time offshore minimizing potential impacts to recreation and offshore vessel traffic.

- An anchor support tug will assist the deployment and recovery of the derrick barges' anchors to enable proper barge placement while minimizing bottom drag and sediment agitation.

- To avoid any impact on the gray whales, offshore construction activities will be scheduled around the gray whale migration season.

- Chevron will have a survey vessel identify and place buoys every 300 feet along existing pipelines within 1,500 feet of the offshore installation area to reduce the possibility of having a construction vessel drop an anchor on an existing pipeline.

- Non-construction vessels will be restricted from the offshore project area to reduce chances of collision.

- The helical anchors will be drilled at slow speeds (approximately 5 revolutions per minute) to minimize disturbance to the sediments.

6.2 HALT-WORK CONDITIONS

As recommended by the UCLA Institute of Archaeology for the 1993 marine terminal reconfiguration, Chevron will apply a halt-work condition to this project to ensure preservation of cultural resources. In the event that unanticipated historic or prehistoric cultural materials or features are encountered, work must stop at the discovery site. A professional cultural resource consultant will be contacted to evaluate the find. In the event any bones of possible human origin are uncovered, the Los Angeles County Coroner must be notified and permitted to investigate the find prior to any further disturbance at the discovery site (UCLA 1992).

Work will also be stopped at any time during the offshore construction when safety conditions appear that could endanger the lives or property of the construction contractor or any other persons at the site.

6.3 SCHEDULING

Chevron estimates that the proposed project will be completed within approximately two to three months of the final permit approval. Preparation of the site for onshore construction will take approximately one week. Assembly and construction of the pipe will require three weeks. Once the pipe has been launched it will take approximately one week to break down the construction equipment and clean up the site.

The pipe launch, including attaching the buoys and weights, is expected to take 48 hours. It will take the tugs approximately two hours to tow the pipe string from the onshore construction site out beyond the breakwaters into San Pedro Bay. Approximately 30 hours will be required for the pipe string to be towed to the installation site. Once at the installation site, the pipe can be submerged to the bottom in one day.

Once the pipe is on the seabed, installation can begin. Installation will take approximately five weeks to connect the tie-in spools and place the auger anchors.

7.0 MITIGATION MONITORING

7.1 OVERVIEW

The mitigation monitoring program is designed to ensure that the project will be constructed in accordance with SLC requirements and that the mitigation measures undertaken by the applicant are implemented as part of this project. The project will be monitored during each phase of construction and operation to ensure that safety and environmental protection are implemented as described in the proposed project. This section discusses elements of the project and the additional mitigation measures that will be monitored for each phase. Monitoring will be conducted by directly observing operations, reviewing Chevron's detailed design plans and inspection reports, and inspecting completed project elements.

Chevron shall provide, as appropriate, access to facilities such as telephones and office space, and transportation to offshore areas so that SLC can observe or inspect any aspect of the project.

7.2 ONSHORE CONSTRUCTION

The following information will be used to monitor onshore construction activities.

- Three weeks prior to beginning construction, Chevron shall submit to SLC for review and approval final design and contractor's execution plans including a list of hazardous materials expected to be used during construction.
- Three weeks prior to beginning construction, Chevron will submit to SLC a confirmed construction schedule showing all significant construction activities.

- Following construction, Chevron shall submit to SLC pipe joint inspection reports.

- Upon completion of the cleanup of the onshore construction site, Chevron shall notify SLC and give SLC the opportunity to verify that the construction site has been returned to its pre-construction condition.

7.3 PIPELINE TRANSPORTATION

The following information will be used to monitor pipeline transportation activities.

- Chevron shall submit to SLC for review and approval the contractor's detailed pipeline towing plan to ensure that a sufficient margin of clearance will exist between the pipeline and the sea bottom during low tides.

- Chevron shall submit to SLC a project specific Critical Operations and Curtailment Plan including provisions for ongoing five day advanced marine weather forecasts.

- Chevron shall submit to SLC a copy of the Notice to Mariners when issued.

7.4 OFFSHORE INSTALLATION

The following information will be re. .ired in order to monitor offshore installation activities.

- Chevron shall submit to SLC for review and approval final design plans including final diffuser design and details for anchoring the pipe to the bottom.

- Within 60 days after project completion, Chevron shall submit to SLC a report of the first pipeline inspection.

7.5 OPERATION OF THE OUTFALL

The following information will be used to monitor offshore operation of the outfall.

- Under Chevron's revised NPDES permit, RWQCB will be monitoring the effectiveness of the new diffuser and the impact, if any, of the discharge on the

new receiving waters. Therefore, additional monitoring of the discharge by SLC will not be required.

8.0 AGENCIES CONTACTED

Section reserved until draft Negative Declaration has been circulated.

9.0 REFERENCES

Bedford, Dennis, California Department of Fish and Game (CDFG), September 7, 1993, personal communication.

CDFG, 1988, A Guide to Wildlife Habitats of California.

___, April 1990a, California's Wildlife, Volume III, Mammals.

___, November 1990b, California's Wildlife, Volume II, Birds.

___, 1991a, "Table 20 (preliminary), Poundage and Value of Landings by Port, Los Angeles Area."

___, September 5, 1991b, Natural Diversity Data Base, "Rarefind."

California Regional Water Quality Control Board, Los Angeles Region (RWQCB), 1975, "Water Quality Control Plan; Los Angeles River Basin 4B."

___, March 20, 1992 (revised April 17, 1992), "Water Discharge Requirements for Chevron USA Inc. (El Segundo Refinery)," NPDES permit No. CA0000337.

California State Lands Commission (SLC), August 1992, "Negative Declaration for the Chevron El Segundo Marine Terminal Modification."

California State Water Resources Control Board (SWRCB), 1990, "Water Quality Control Plan, Ocean Waters of California, California Ocean Plan."

Collins, Tia, September 10, 1991, personal communication, Staff Member, American Cetacean Society.

Ecology and Environment, Inc., May 6, 1992, site visit.

Eres, Joann, April 30, 1992, personal communication, California Department of Fish and Game.

Friesen, Terry, November 10, 1993, personal communication, Chevron, El Segundo.

Gleason, Steve, Port of Long Beach, October 11, 1993, personal communication, Manager of Transportation Planning.

Marine Biological Consultants, Inc., 1979, "Federal Water Pollution Control Act 316(b) Demonstration for El Segundo Refinery," Los Angeles County, California.

___, May 1982, "Evaluation of Groin Emplacement, Offshore Dredging, and Sand Replenishment Impacts on the Marine Biota Near the Chevron U.S.A. Refinery," El Segundo, California.

MBC Applied Environmental Sciences, April 1991, "Bioaccumulation of Metals and Organics In California Mussels Near Chevron USA El Segundo Refinery's Ocean Discharge."

___, 1992, "National Pollutant Discharge Elimination System 1992 Receiving Water Monitoring Report, Chevron USA Products Company Refinery, El Segundo, California."

McElroy Manufacturing, Inc., McElroy MegaMc Series Fusion Machines, Bulletin No. 0401935M.

___, December 29, 1992, McElroy MegaMc 2J2065 Fusion Unit.

Meras, Jerry, November 4, 1993, personal communication, Sr. Air Quality Engineer, South Coast Air Quality Management District.

Moore, Jon T., P.E., October 14, 1993, Senior Engineer, Noble Consultants, Irvine, California, letter to Thomas Hascup, P.E., Chevron USA, El Segundo, California.

Nitsos, Dick, April 27, 1992, personal communication, Biologist, California Department of Fish and Game.

Oceaneering, 1993, "Preliminary Installation Procedures for the Marine Outfall Project."

Quinn, Gary, September 17, 1993, personal communication, South Coast Air Quality Management District.

Radian Corporation, July 14, 1989a, "Ocean Current and Dilution Study for the Chevron USA Inc.--El Segundo Refinery Ocean Outfall."

___, December 1989b, "Chevron USA Inc.--El Segundo Refinery Beach and Surf Health Based Exposure Screening Criteria."

___, October 1992, "Evaluation of Potential Health Risks Resulting From Exposure to Ocean Water Near the Chevron El Segundo Refinery Outfall."

Radian Corporation, Flow Science Incorporated and MBC Applied Environmental Sciences, September 1989, "Preliminary Outfall Siting Study for the Chevron USA Inc. El Segundo Refinery."

Rodriquez, Linda, October 10, 1993, personal communication, Catalina Cruises.

University of California, Los Angeles Institute of Archaeology (UCLA), April 27, 1992, "Archaeological Records Search for the Chevron El Segundo Marine Terminal, Long Beach and Venice Quads," prepared by Carl Harrington.

University of California, Santa Cruz (UCSC), 1978, Marine Mammal and Seabird Survey of Southern California Bight Area, Vol. II, Detailed Synthesis of Findings, U.S. Bureau of Land Management Contract 08550-CT5-28.

10.0 COMMENTS RECEIVED IN RESPONSE TO PROPOSED NEGATIVE DECLARATION

Section reserved until draft Negative Declaration has been circulated.

11.0 RESPONSE TO COMMENTS

Section reserved until draft Negative Declaration has been circulated.